PRELIMINARY SITE PLAN FOR
QUIKTRIP STORE #0431
NEC OF S. MESA DRIVE AND BASELINE ROAD
MESA, AZ

LEGAL DESCRIPTION:

THE LEGAL DESCRIPTION HAS BEEN SUBMITTED AS A SEPARATE DOCUMENT.

BENCHMARKS:

BM–1 BRASS TAG AT TOP OF CURB AT THE NORTHWEST CORNER OF BASELINE ROAD & MESA DRIVE.
ELEVATION = 1213.42 FEET (CITY OF MESA DATUM)

BASIS OF BEARING:

THE SOUTH LINE OF THE SOUTHEAST QUARTER OF SECTION 34, MONUMENTED AS SHOWN HEREON AS BEARING N88°57'30"W.

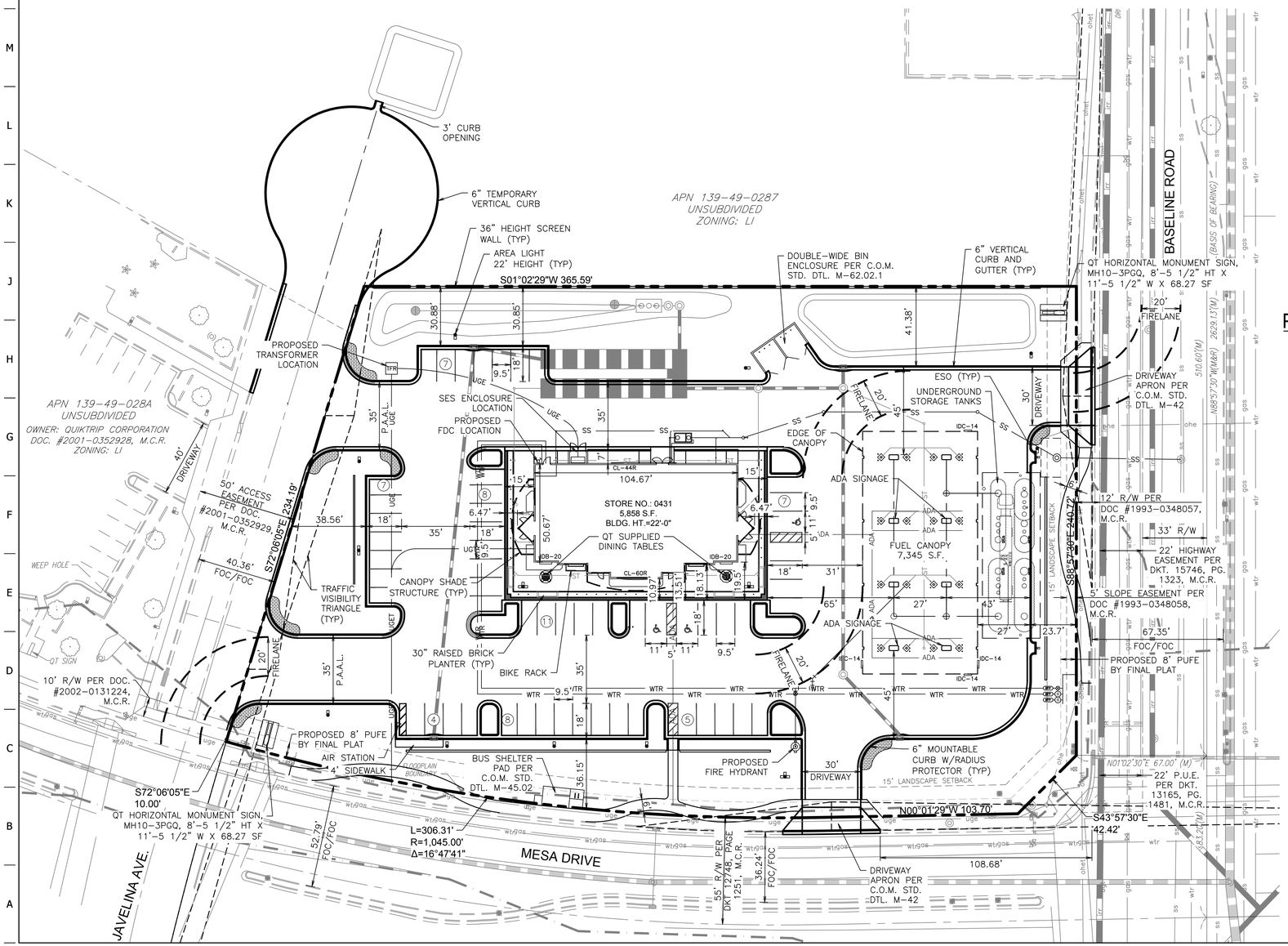

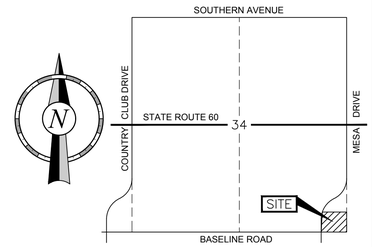

Vicinity Map
Not to Scale
SECTION 34
T.1N., R.5E., G.&S.R.B.& M.
MARICOPA COUNTY, ARIZONA

SITE LEGEND

- BOUNDARY LINE
- CONCRETE CURB AND GUTTER
- QT ACCENT CONCRETE
- MOUNTABLE CURB W/RADIUS PROTECTOR
- PARKING SPACE INDICATOR
- AREA LIGHT
- MULTIPLE PRODUCT DISPENSER WITH CANOPY COLUMNS AND BOLLARDS
- TFR — TRANSFORMER
- FUEL SYSTEM ACCESS MANWAY

PROJECT CONTACT LIST:

SURVEYOR OF RECORD
THE WLB GROUP, INC
DON WALDING, RLS
1600 W BROADWAY BLVD, STE 150
TEMPE, AZ 85282
TEL: (480) 736-1600
FAX: (480) 736-1602
DWALDING@WLBGROUP.COM

ENGINEER OF RECORD
THE WLB GROUP, INC
MIKE RHODES, PE
1600 W BROADWAY BLVD, STE 150
TEMPE, AZ 85282
TEL: (480) 736-1600
FAX: (480) 736-1602
MRHODES@WLBGROUP.COM

OWNER/DEVELOPER
QT REAL ESTATE PROJECT MANAGER
QUIKTRIP CORPORATION–PHOENIX DIV.
JONATHAN NAUT
1116 E BROADWAY RD
TEMPE, AZ 85282
TEL: (480) 446-6318
FAX: (480) 921-1927
JNAUT@QUIKTRIP.COM

QT CIVIL PROJECT MANAGER
QUIKTRIP CORPORATION
ASHLEY GOODRICH
4705 S 129TH EAST AVE
TULSA, OK 74134
TEL: (918) 615-7273
AGOODRIC@QUIKTRIP.COM

SITE DATA (QUIKTRIP STORE)

EXISTING ZONING:	LI
PROPOSED USE:	GAS STATION/CONV. STORE
SITE AREA INFORMATION:	
GROSS AREA:	117,987 S.F. (2.71 AC.)
NET AREA:	106,487 S.F. (2.44 AC.)
QUIKTRIP BUILDING:	5,858 S.F.
QUIKTRIP FUELING CANOPY:	7,345 S.F.
PARCEL COVERAGE:	12.4 %
PARKING REQUIRED:	16 SPACES
PARKING PROVIDED:	54 PLUS 3 ACCESSIBLE
MAX BUILDING HEIGHT:	22'–0" AT FRONT DOOR
AVERAGE DISTANCE FROM BUILDING EXTERIOR TO FOC	
FRONT ENTRANCE	15.54'
SIDE ENTRANCES	13.58' ON EACH SIDE

30 15 0 30 60

CALL TWO WORKING DAYS BEFORE YOU DIG
1-800-STAKE-IT
(1.800.782.5348)
BLUE STAKE CENTER
(OUTSIDE MARICOPA COUNTY)

17925 MICHAEL G. RHODES
Registered Professional Engineer
ARIZONA, U.S.A.
EXP. 3/31/18

PROJECT NO.:05-0431

The WLB Group Inc.
Engineering Planning Surveying
Landscape Architecture Urban Design
Offices located in Tucson, Phoenix, Prescott, AZ and Las Vegas, NV.
1600 West Broadway Rd. Ste 150
Tempe, Arizona (480) 736-1600
WLB PROJECT NO. 21006-400

QuikTrip No. 0431
NEC OF S. MESA DR. AND E. BASELINE RD.
MESA, ARIZONA

© COPYRIGHT QUIKTRIP CORPORATION 2011
ANY UNAUTHORIZED USE, REPRODUCTION, PUBLICATION, DISTRIBUTION, OR SALE IN WHOLE OR IN PART, IS STRICTLY FORBIDDEN.

PROTOTYPE:	P-91 (05/01/17)
DIVISION:	05
VERSION:	001
DESIGNED BY:	JAW
DRAWN BY:	JAW
REVIEWED BY:	MGR

REV	DATE	DESCRIPTION
		ORIGINAL ISSUE DATE:

SHEET TITLE:
PRELIMINARY SITE PLAN

SHEET NUMBER:
1 of 4

FILE LOCATION:N:\110007\Store 0431\01 Civil\05-0431 Civil.dwg TAB NAME:Site (Prelim) USER:jwilliams SAVED:6/30/2017 2:19 PM PLOTTED:6/30/2017 2:24 PM

GRADING NOTES

1. GAS CANOPY INSTALLER SHALL INSTALL THE CANOPY COLUMN DRAIN PIPE AND OVERFLOW FITTING. THE STORM WATER INSTALLER SHALL CONNECT THEIR PIPING TO THE GAS INSTALLER'S OVERFLOW FITTING.
2. TO AVOID ANY DEFINED CRESTS OR SUMPS, "GRADE BREAKS" SHALL BE CONSTRUCTED AS A "VERTICAL CURVE". SURVEYOR & CONTRACTOR SHALL CONFER WITH QUIKTRIP CONSTRUCTION MANAGER PRIOR TO CONSTRUCTION STAKING OR CONCRETE PLACEMENT RELATIVE TO ANY GRADE BREAKS.

GRADING LEGEND

ST	STORM PIPE (< 10" NEW)
	STORM PIPE (> 12" NEW)
	STORM PIPE (> 12" EXISTING)
1215	MAJOR CONTOUR (NEW)
1214	MINOR CONTOUR (NEW)
1215	MAJOR CONTOUR (EXISTING)
1214	MINOR CONTOUR (EXISTING)
ADA	ADA PATH OF TRAVEL
TC 1214.50 G 1214.00	TOP OF CURB ELEVATION (NEW) GUTTER ELEVATION (NEW)
FG 1214.00	FINISHED GRADE ELEVATION (NEW)
FG 1214.00	SPOT ELEVATION (EXISTING)
	STORM GRATE (NEW)

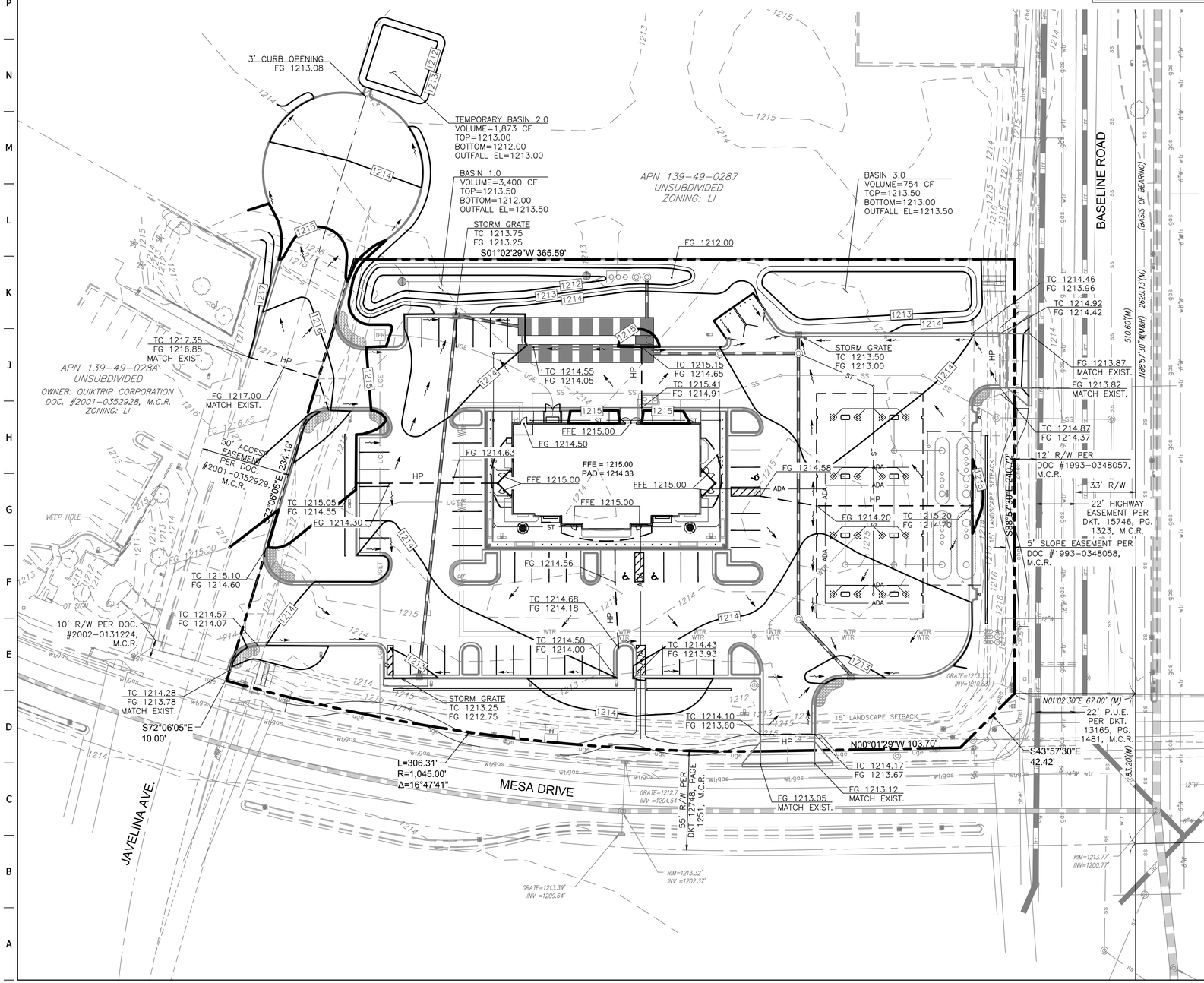

DRAINAGE AREA

Total Area = 81,453 S.F.

RETENTION REQUIRED:

$V_{REQUIRED} = \frac{(C)(P)(A)}{12}$

where:
C = RUNOFF COEFFICIENT
P = PRECIPITATION 100-YR, 2-HOUR (2.17")
A = DRAINAGE AREA

AREA 1

$V_{REQUIRED} = \frac{(0.90)(2.17)(81,453)}{12}$

$V_{REQUIRED}$ = 13,238 CF

RETENTION PROVIDED

$V_{PROVIDED} = \frac{d \times (Atop + Abottom + \sqrt{(Atop * Abottom)})}{3}$

where: d = Basin depth
Atop = Top area of basin
Abottom = Bottom area of basin

BASIN STORAGE

BASIN 1.0 Atop = 3,445 S.F.
Abottom = 1,081 S.F.
d = 1.5 FT.
$V_{PROVIDED}$ = 3,400 CF

PIPE STORAGE

where: $V_{PROVIDED} = (3.16) \times (r^2) \times (L)$
r = RADIUS
L = LENGTH

120" DIAMETER PIPE

r = 5.0 SF
L = 150 LF
$V_{PROVIDED}$ = 11,781 CF
TOTAL $V_{PROVIDED}$ = 15,181 CF

AREA 2

$V_{REQUIRED} = \frac{(0.95)(2.17)(9,515)}{12}$

$V_{REQUIRED}$ = 1,635 CF

RETENTION PROVIDED

$V_{PROVIDED} = \frac{d \times (Atop + Abottom + \sqrt{(Atop * Abottom)})}{3}$

where: d = Basin depth
Atop = Top area of basin
Abottom = Bottom area of basin

BASIN STORAGE

BASIN 2.0 Atop = 1,579 S.F.
Abottom = 1,024 S.F.
d = 1.0 FT.
$V_{PROVIDED}$ = 1,873 CF

AREA 3

$V_{REQUIRED} = \frac{(0.50)(2.43)(4,097)}{12}$

$V_{REQUIRED}$ = 415 CF

RETENTION PROVIDED

$V_{PROVIDED} = \frac{d \times (Atop + Abottom + \sqrt{(Atop * Abottom)})}{3}$

where: d = Basin depth
Atop = Top area of basin
Abottom = Bottom area of basin

BASIN STORAGE

BASIN 3.0 Atop = 1,817 S.F.
Abottom = 1,220 S.F.
d = 0.5 FT.
$V_{PROVIDED}$ = 754 CF

30 15 0 30 60

Registered Professional Engineer
Michael G. Rhodes
17925
MICHAEL G. RHODES
Date Signed 6/30/17
ARIZONA, U.S.A.
EXP. 3/31/18

PROJECT NO.:05-0431

The WLB Group Inc.
Engineering Planning Surveying
Landscape Architecture Urban Design
Offices located in Tucson, Phoenix, Flagstaff, and Las Vegas, NV.
1600 West Broadway Rd. Ste 150
Tempe, Arizona (480) 736-1600
WLB PROJECT NO. 21006-1400

QuikTrip No. 0431

NEC OF S. MESA DR. AND E. BASELINE RD.
MESA, ARIZONA

© COPYRIGHT QUIKTRIP CORPORATION 2011
ANY UNAUTHORIZED USE, REPRODUCTION, PUBLICATION, DISTRIBUTION, OR SALE IN WHOLE OR IN PART, IS STRICTLY FORBIDDEN.

PROTOTYPE:	P-91 (05/01/17)
DIVISION:	05
VERSION:	001
DESIGNED BY:	JAW
DRAWN BY:	JAW
REVIEWED BY:	MGR

REV	DATE	DESCRIPTION
		ORIGINAL ISSUE DATE:

SHEET TITLE:
PRELIMINARY GRADING PLAN

SHEET NUMBER:
2 of 4

FILE LOCATION:N:\111000\Store 0431\01 Civil\05-0431 Civil.dwg TAB NAME:Grading (Prelim) USER:jwilliams SAVED:6/30/2017 2:19 PM PLOTTED:6/30/2017 2:24 PM

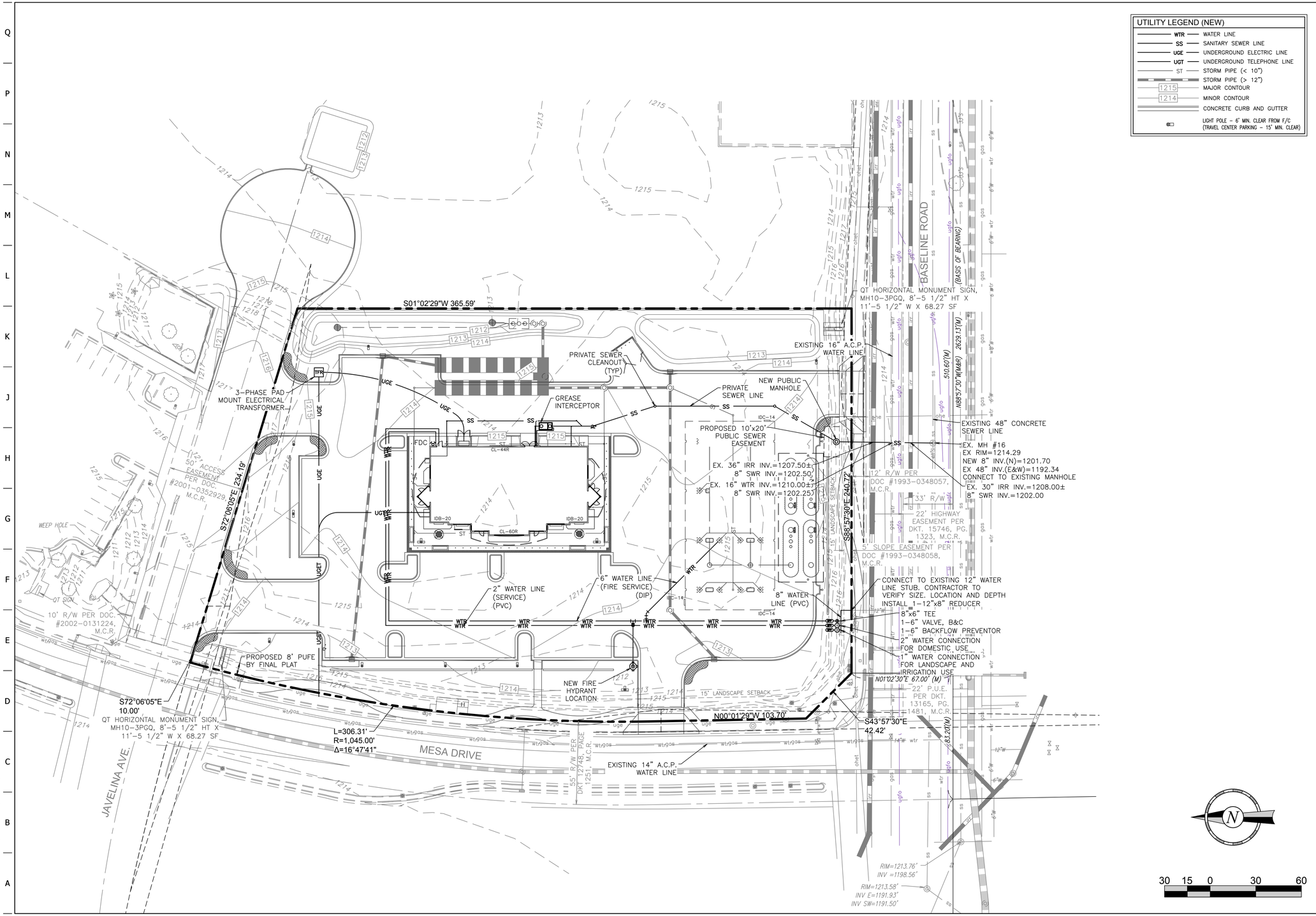

UTILITY LEGEND (NEW)

WTR	WATER LINE
SS	SANITARY SEWER LINE
UGE	UNDERGROUND ELECTRIC LINE
UGT	UNDERGROUND TELEPHONE LINE
ST	STORM PIPE (< 10")
	STORM PIPE (> 12")
1215	MAJOR CONTOUR
1214	MINOR CONTOUR
	CONCRETE CURB AND GUTTER
	LIGHT POLE - 6' MIN. CLEAR FROM F/C (TRAVEL CENTER PARKING - 15' MIN. CLEAR)

30 15 0 30 60

Registered Professional Engineer (Civil) 17925 MICHAEL G. RHODES Date Signed 6/30/17 ARIZONA, U.S.A. EXP. 3/31/18

PROJECT NO.:05-0431

The WLB Group Inc.

Engineering Planning Surveying Landscape Architecture Urban Design Offices located in Tucson, Phoenix, Flagstaff, AZ and Las Vegas, NV. 1600 West Broadway Rd, Ste 150 Tempe, Arizona (480) 736-1600 WLB PROJECT NO. 217006-A-001

QuikTrip No. 0431

NEC OF S. MESA DR. AND E. BASELINE RD.
MESA, ARIZONA

© COPYRIGHT QUIKTRIP CORPORATION 2011 ANY UNAUTHORIZED USE, REPRODUCTION, PUBLICATION, DISTRIBUTION, OR SALE IN WHOLE OR IN PART, IS STRICTLY FORBIDDEN.

PROTOTYPE: P-91 (05/01/17)
DIVISION: 05
VERSION: 001
DESIGNED BY: JAW
DRAWN BY: JAW
REVIEWED BY: MGR

REV	DATE	DESCRIPTION

ORIGINAL ISSUE DATE:

SHEET TITLE:
PRELIMINARY UTILITY PLAN

SHEET NUMBER:
3 of 4

FILE LOCATION:N:\110007\Store 0431\01 Civil\05-0431 Civil.dwg TAB NAME:Utility (Prelim) USER:jwilliams SAVED:6/30/2017 2:19 PM PLOTTED:6/30/2017 2:25 PM

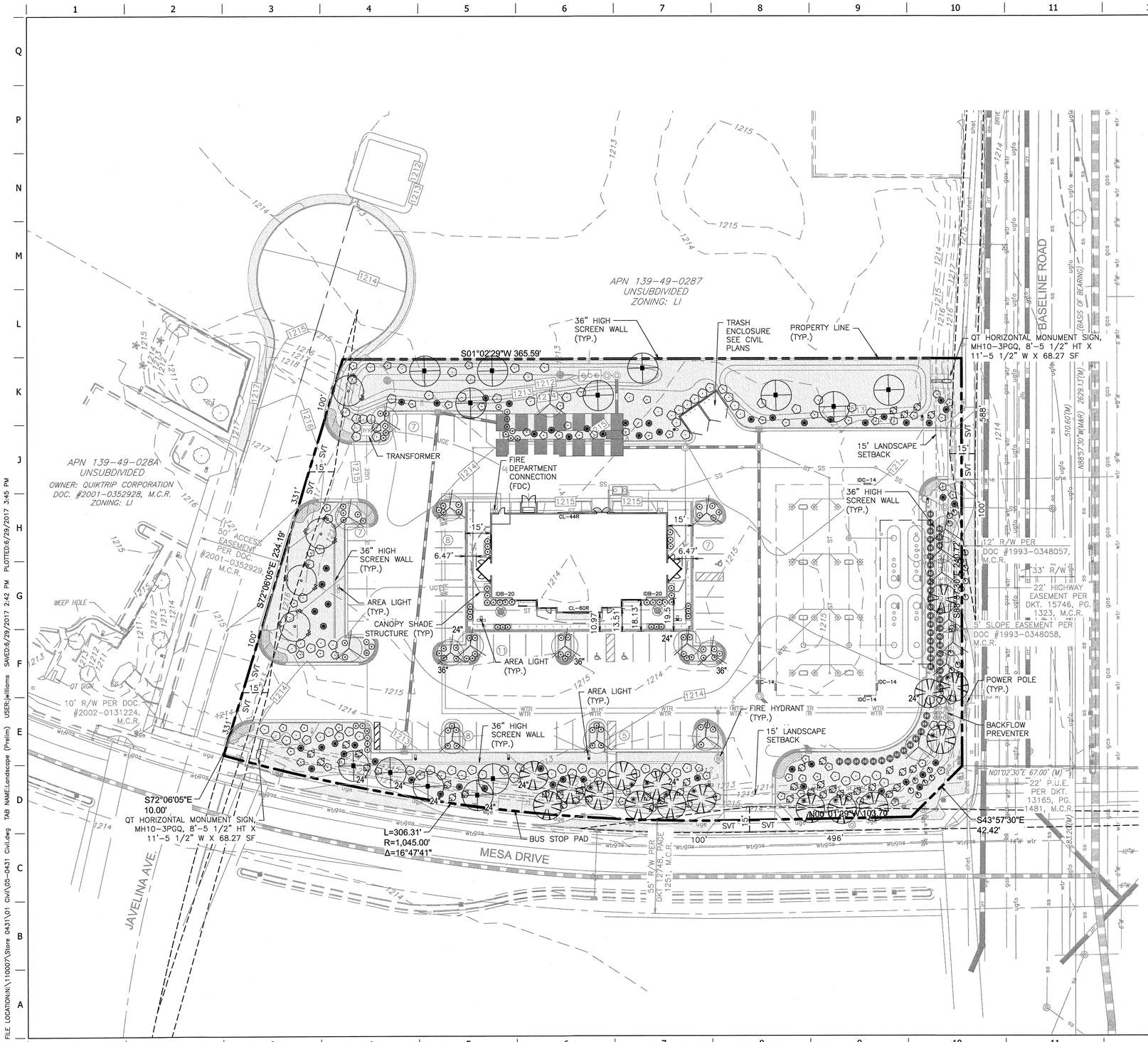

LANDSCAPE CONCEPT PLANT MATERIALS

TREES	SIZE	QUANTITY
SISSOO DALBERGIA SISSOO	15 GALLON	4
CHINESE PISTACHE PISTACHIA CHINENSIS	24" BOX 36" BOX	3 13
MESQUITE PROSOPIS VELUTINA	15 GALLON 24" BOX	9 4
LIVE OAK QUERCUS VIRGINIANA	24" BOX 36" BOX	18 3
SHRUBS		
AGAVE PARRYI PARRY'S AGAVE	5 GALLON	11
CONVOLVULUS CNEORUM BUSH MORNING GLORY	5 GALLON	20
RED YUCCA HESPERALOE PARVIFLORA	5 GALLON	54
CHIHUAHUAN SAGE LEUCOPHYLLUM LAEVIGATUM	5 GALLON	97
BLUE RANGER LEUCOPHYLLUM ZYGOPHYLLUM	5 GALLON	42
PETITE PINK OLEANDER NERIUM OLEANDER "PETITE PINK"	5 GALLON	110
DESERT RUELLIA RUELLIA PENINSULARIS	5 GALLON	46
GROUNDCOVER		
GOLD LANTANA	5 GALLON	61
DECOMPOSED GRANITE - "GOLD" 3/4" SIZED - 3" DEEP		39,685 SQ. FT.

MESA LANDSCAPE REQUIREMENTS

Perimeter Landscaping Table 11-33-3-A-4:	Required	Provided
Mesa Drive - 410 LF Street Frontage 1 Tree and 6 Shrubs per 25 Linear Feet of Street Frontage (4 trees and 24 shrubs per 100')	17 Trees 102 Shrubs	17 Trees 102 Shrubs
Baseline Road - 241 LF Street Frontage 1 Tree and 6 Shrubs per 25 Linear Feet of Street Frontage (4 trees and 24 shrubs per 100')	11 Trees 66 Shrubs	11 Trees 66 Shrubs
A minimum of 25 percent of the total required trees shall be 36-inch or larger box trees. A minimum of 50 percent of the total required trees shall be 24-inch box trees.		
Interior Parking Lot Landscaping 11-33-4.D	Required	Provided
1 Tree / 6 Shrubs per 8 Spaces Trees - 10% must be 36" box The balance of the required trees shall be at least 24-inch box.	14 Trees 84 Shrubs	14 Trees 84 Shrubs

SIGHT VISIBILITY REQUIREMENTS

	Near Side	Far Side
Mesa Drive- Speed Limit = 40mph (Design Speed = 45mph) 2 Lanes Undivided (2 LU)	496'	100'
Baseline Road- Speed Limit = 45mph (Design Speed = 50mph) 3 Lanes Undivided (3 LU)	588'	100'
Private Access Driveway- Speed Limit = 25mph (Design Speed = 30mph) 2 Lanes Undivided (2 LU)	331'	100'

30 15 0 30 60

25621
GARY L.
GRIZZLE
Date Signed 6-27-17
ARIZONA, U.S.A.
EXPIRES 12/31/2017

PROJECT NO.:05-0431

The WLB Group
Engineering Planning Surveying
Landscape Architecture Urban Design
Phoenix, AZ and Las Vegas, NV.
1600 West Broadway Rd. Ste 150
Tempe, Arizona 85282 480-736-1600
WLB PROJECT NO. 21006-4-001

QuikTrip No. 0431

NEC OF S. MESA DR. AND E. BASELINE RD.
MESA, ARIZONA

© COPYRIGHT QUIKTRIP CORPORATION 2011
ANY UNAUTHORIZED USE, REPRODUCTION, PUBLICATION, DISTRIBUTION, OR SALE IN WHOLE OR IN PART, IS STRICTLY FORBIDDEN.

PROTOTYPE:	P-91 (05/01/17)
DIVISION:	05
VERSION:	001
DESIGNED BY:	JAW
DRAWN BY:	JAW
REVIEWED BY:	MGR

REV	DATE	DESCRIPTION

ORIGINAL ISSUE DATE:

SHEET TITLE:
PRELIMINARY LANDSCAPE PLAN

SHEET NUMBER:
4 of 4

FILE LOCATION:N:\110007\Store 0431\01 Civil\05-0431 Civil.dwg TAB NAME:Landscape (Prelim) USER:jwilliams SAVED:6/29/2017 2:42 PM PLOTTED:6/29/2017 3:45 PM

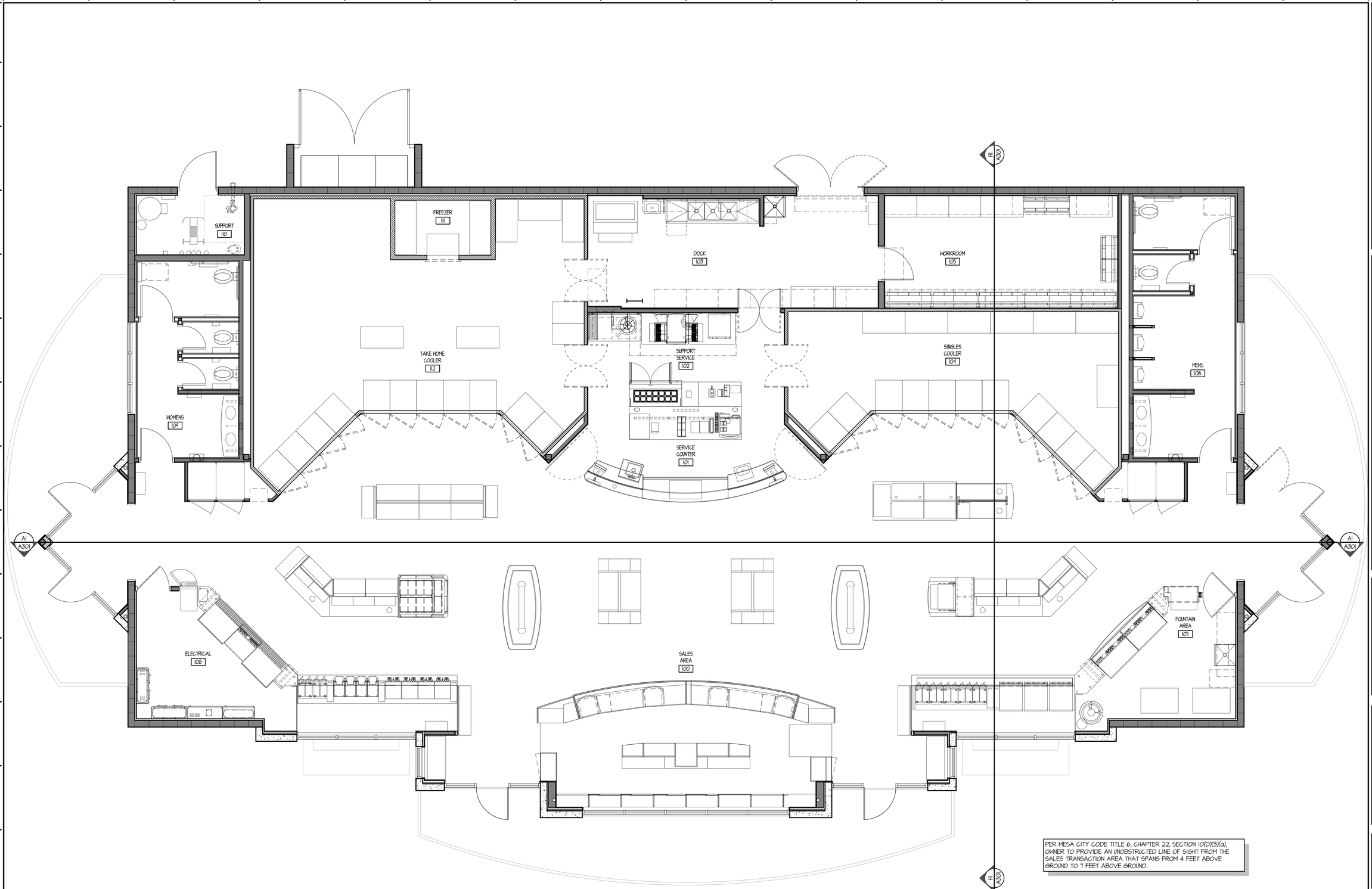

PER MESA CITY CODE TITLE 6, CHAPTER 22, SECTION 10(D)(3)(a), OWNER TO PROVIDE AN UNOBSTRUCTED LINE OF SIGHT FROM THE SALES TRANSACTION AREA THAT SPANS FROM 4 FEET ABOVE GROUND TO 7 FEET ABOVE GROUND.

NOT FOR CONSTRUCTION

KDF JOB #: 17013

KDF ARCHITECTURAL GROUP, LLC
300 W. Clarendon Avenue
Suite 320
Phoenix, AZ 85013
O: 602.234.1868
F: 602.234.1413

QuikTrip No. 0431

NEC OF S. MESA DR. AND E. BASELINE RD.
MESA, ARIZONA

© QUIKTRIP CORPORATION 2017.
UNAUTHORIZED USE, REPRODUCTION, PUBLICATION, DISTRIBUTION OR SALE IN WHOLE OR IN PART, IS STRICTLY FORBIDDEN.

PROTOTYPE	P-90
DIVISION	PHOENIX
VERSION	GEN III
DATE	02-01-2017

REV	DATE	DESCRIPTION

ORIGINAL ISSUE DATE: 05/01/2017

SHEET TITLE:
REFERENCE FLOOR PLAN

SHEET NUMBER:
A101

A1
1/4" = 1'-0"
REFERENCE FLOOR PLAN

NORTH

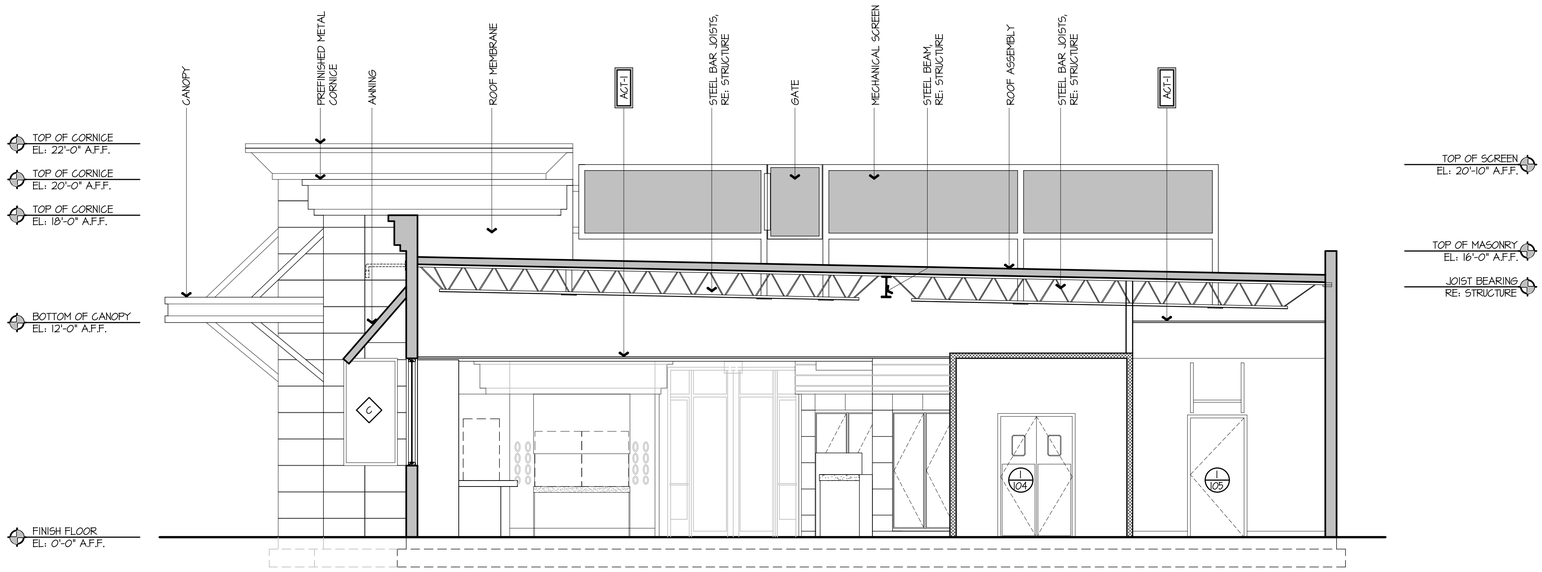

H1 BUILDING SECTION

3/4" = 1'-0" A1-A101

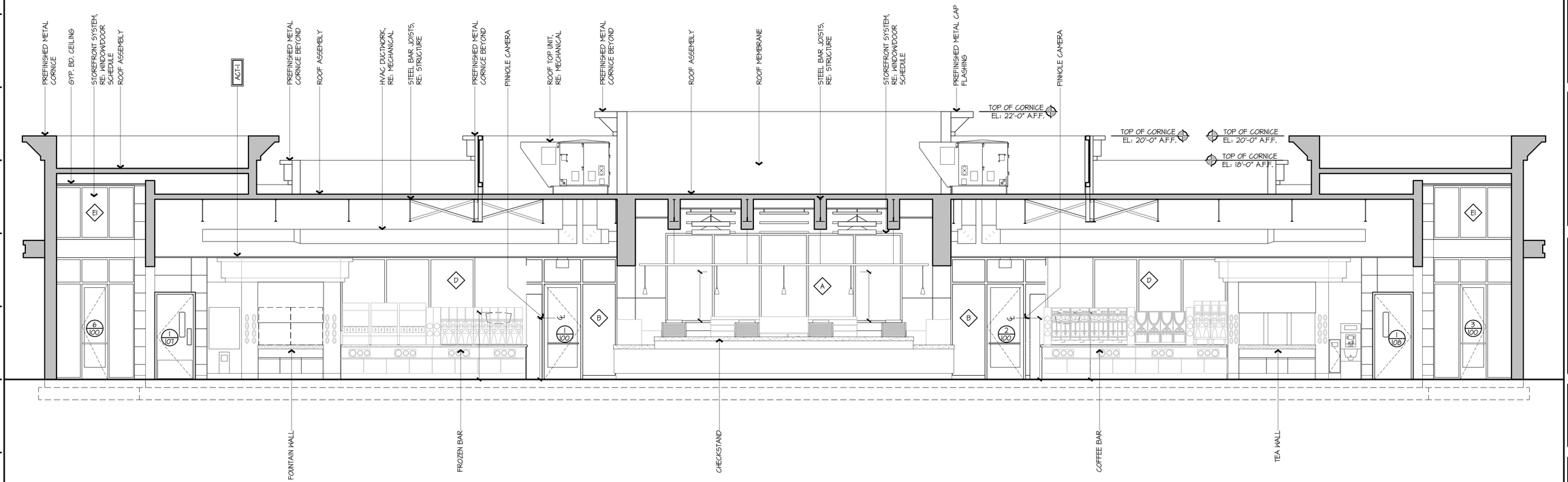

A1 BUILDING SECTION

3/4" = 1'-0" A1-A101

NOT FOR CONSTRUCTION

KDF JOB #: 17013

KDF ARCHITECTURAL GROUP, LLC
300 W. Clarendon Avenue
Suite 320
Phoenix, AZ 85013
O: 602.234.1868
F: 602.234.1413

QuikTrip No. 0431

NEC OF S. MESA DR. AND E. BASELINE RD.
MESA, ARIZONA

© QUIKTRIP CORPORATION 2011
ANY UNAUTHORIZED USE, REPRODUCTION, PUBLICATION, DISTRIBUTION OR SALE IN WHOLE OR IN PART, IS STRICTLY FORBIDDEN.

PROTOTYPE	P-90
DIVISION	PHOENIX
VERSION	GEN III
DATE	02-01-2017

REV	DATE	DESCRIPTION

ORIGINAL ISSUE DATE: 05/01/2017

SHEET TITLE:
BUILDING SECTIONS

SHEET NUMBER:
A301

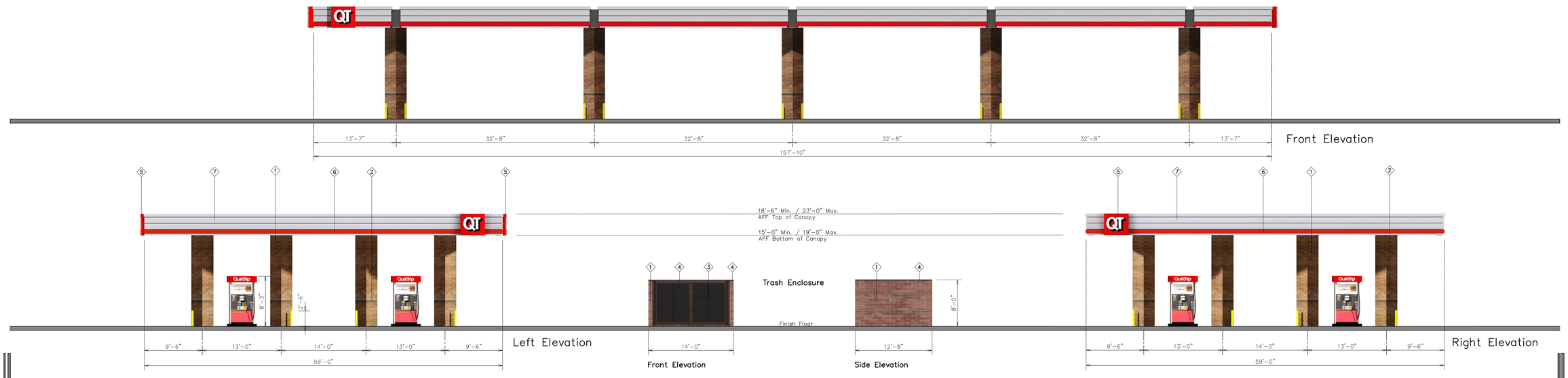

QuikTrip.

4705 South 129th East Ave.
Tulsa, OK 74134-7008
P.O. Box 3475
Tulsa, OK 74101-3475
(918) 615-7700

Store #			Address:	City, State:
431	IDC-14 Canopy Elevations		NEC Mesa Dr & Baseline Rd	Mesa, AZ
Serial #	Scale:	Issue Date:	Drawn By:	Rev/Notes:
05-0431-GD10	1/8"=1'-0"	05.02.17	JK	

#	FINISH	MANUFACTURER	SPECIFICATION
1	BRONZESTONE	INTERSTATE BRICK	ATLAS STRUCTURAL BRICK
2	MIDNIGHT BLACK	INTERSTATE BRICK	ATLAS STRUCTURAL BRICK
3	BLACK	ALL COURT FABRICS	POLYPRO 95 MESH
4	DARK BRONZE	LANE	METAL/PAINT
5	IDC-14	ALLEN INDUSTRIES	ILLUMINATED SIGNAGE
6	RED POLYCARBONATE	ALLEN INDUSTRIES	ILLUMINATED BAND
7	HLZ-ALUMINUM	ALPOLIC	CANOPY

COPYRIGHT © 2011 QUIKTRIP CORPORATION DESIGN PATENTS
QUIKTRIP PLANS ARE THE EXCLUSIVE PROPERTY OF QUIKTRIP CORPORATION, TULSA, OKLAHOMA. THESE PLANS ARE PROTECTED IN THEIR ENTIRETY BY DOMESTIC AND INTERNATIONAL COPYRIGHT AND PATENT STATUTES. ANY UNAUTHORIZED USE, REPRODUCTION, PUBLICATION, DISTRIBUTION OR SALE IN WHOLE OR IN PART, IS STRICTLY FORBIDDEN.

FUEL TRUCK TURNING TEMPLATE EXHIBIT

QUIKTRIP STORE #0431

NEC OF S. MESA DRIVE AND BASELINE ROAD

MESA, AZ

BENCHMARKS:

BM–1 BRASS TAG AT TOP OF CURB AT THE NORTHWEST CORNER OF BASELINE ROAD & MESA DRIVE.
ELEVATION = 1213.42 FEET (CITY OF MESA DATUM)

BASIS OF BEARING:

THE SOUTH LINE OF THE SOUTHEAST QUARTER OF SECTION 34, MONUMENTED AS SHOWN HEREON AS BEARING N88°57'30"W.

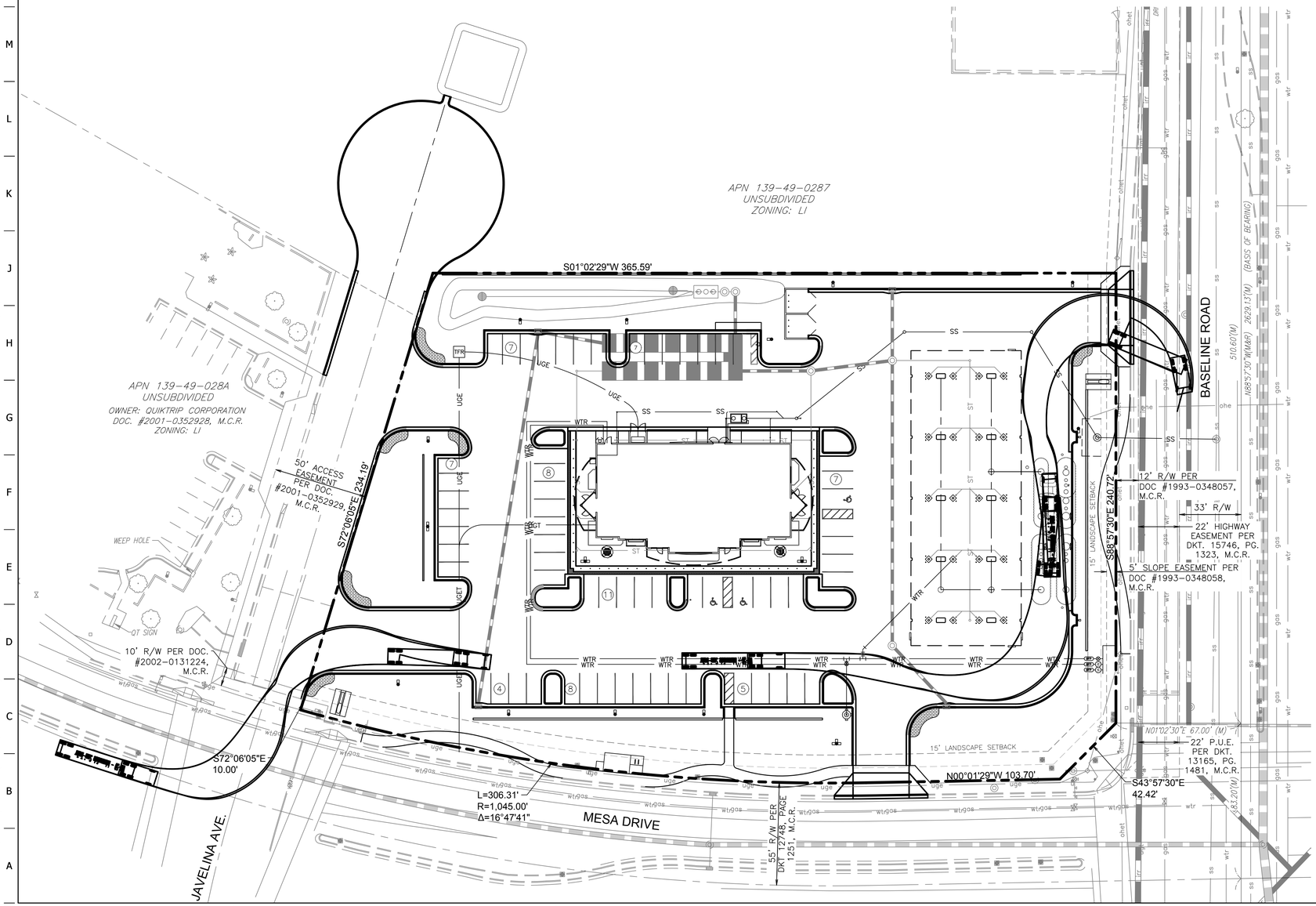

30 15 0 30 60

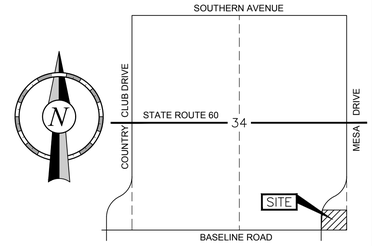

Vicinity Map

Not to Scale

SECTION 34
T.1N., R.5E., G.&S.R.B.& M.
MARICOPA COUNTY, ARIZONA

SITE LEGEND

- BOUNDARY LINE
- CONCRETE CURB AND GUTTER
- QT ACCENT CONCRETE
- MOUNTABLE CURB W/RADIUS PROTECTOR
- (7) PARKING SPACE INDICATOR
- AREA LIGHT
- MULTIPLE PRODUCT DISPENSER WITH CANOPY COLUMNS AND BOLLARDS
- TFR TRANSFORMER
- FUEL SYSTEM ACCESS MANWAY

PROJECT CONTACT LIST:

SURVEYOR OF RECORD
THE WLB GROUP, INC
DON WALDING, RLS
1600 W BROADWAY BLVD, STE 150
TEMPE, AZ 85282
TEL: (480) 736–1600
FAX: (480) 736–1602
DWALDING@WLBGROUP.COM

ENGINEER OF RECORD
THE WLB GROUP, INC
MIKE RHODES, PE
1600 W BROADWAY BLVD, STE 150
TEMPE, AZ 85282
TEL: (480) 736–1600
FAX: (480) 736–1602
MRHODES@WLBGROUP.COM

OWNER/DEVELOPER
QT REAL ESTATE PROJECT MANAGER
QUIKTRIP CORPORATION–PHOENIX DIV.
JONATHAN NAUT
1116 E BROADWAY RD
TEMPE, AZ 85282
TEL: (480) 446–6318
FAX: (480) 921–1927
JNAUT@QUIKTRIP.COM

QT CIVIL PROJECT MANAGER
QUIKTRIP CORPORATION
ASHLEY GOODRICH
4705 S 129TH EAST AVE
TULSA, OK 74134
TEL: (918) 615–7273
AGOODRIC@QUIKTRIP.COM

© COPYRIGHT QUIKTRIP CORPORATION 2011
ANY UNAUTHORIZED USE, REPRODUCTION, PUBLICATION, DISTRIBUTION, OR SALE IN WHOLE OR IN PART, IS STRICTLY FORBIDDEN.

CALL TWO WORKING DAYS BEFORE YOU DIG
1-800-STAKE-IT
(1.800.782.5348)
BLUE STAKE CENTER
(OUTSIDE MARICOPA COUNTY)

PROJECT NO.:05-0431

The WLB Group Inc.
Engineering Planning Surveying
Landscape Architecture Urban Design
Offices located in Tucson, Phoenix, Prescott, AZ and Las Vegas, NV.
1600 West Broadway Rd. Ste 150
Tempe, Arizona (480) 736–1600
WLB PROJECT NO: 21706-401

QuikTrip No. 0431
NEC OF S. MESA DR. AND E. BASELINE RD.
MESA, ARIZONA

PROTOTYPE:	P-90 (02/01/17)
DIVISION:	05
VERSION:	001
DESIGNED BY:	JAW
DRAWN BY:	JAW
REVIEWED BY:	MGR

REV	DATE	DESCRIPTION

ORIGINAL ISSUE DATE:

SHEET TITLE:
FUEL TRUCK TURNING TEMPLATE EXHIBIT

SHEET NUMBER:
1 of 1

FILE LOCATION:N:\110007\Store 0431\Exhibits\QT 0431 Turning Template.dwg TAB NAME:Turning Template USER:jwilliams SAVED:5/10/2017 12:39 PM PLOTTED:5/10/2017 12:43 PM

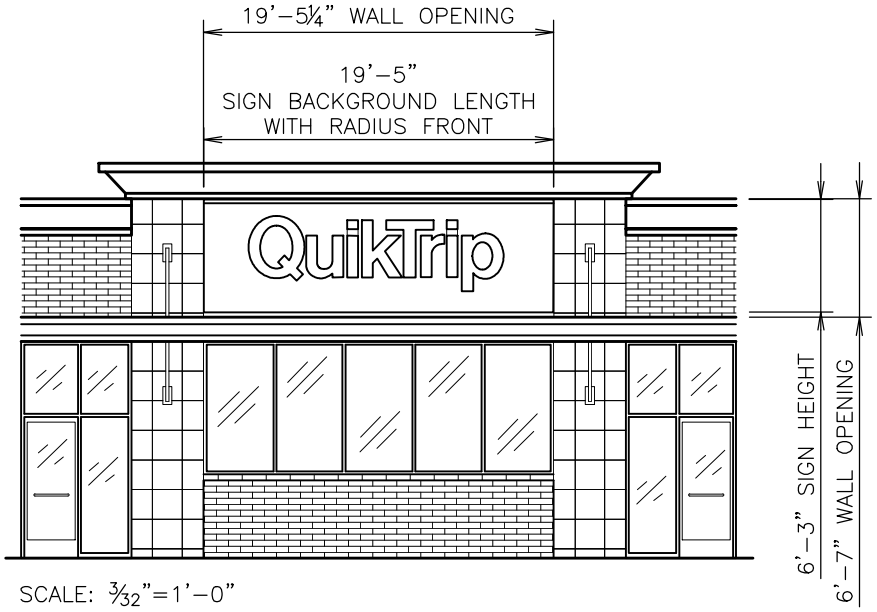

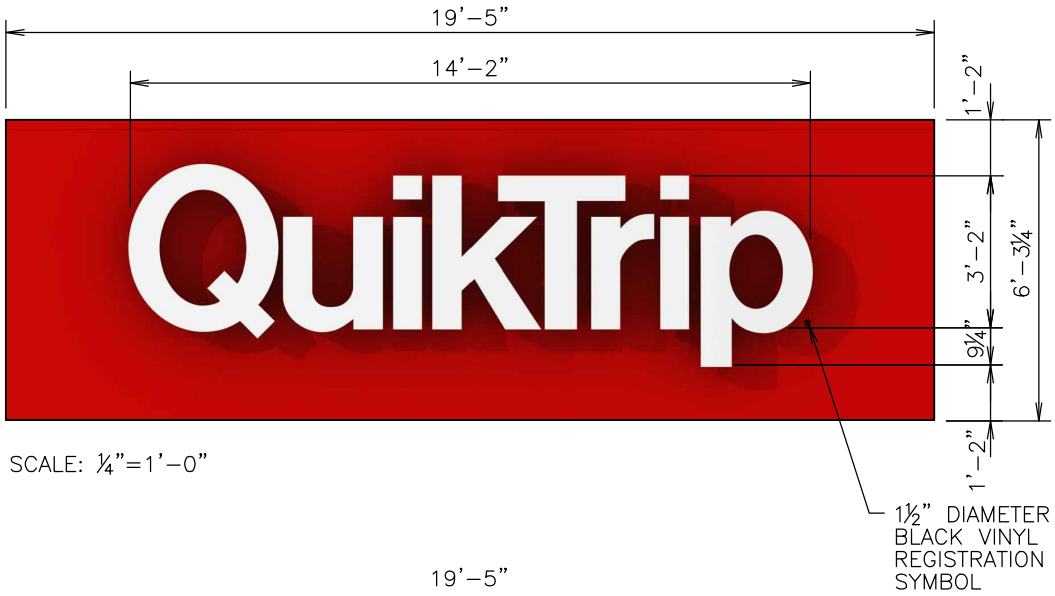

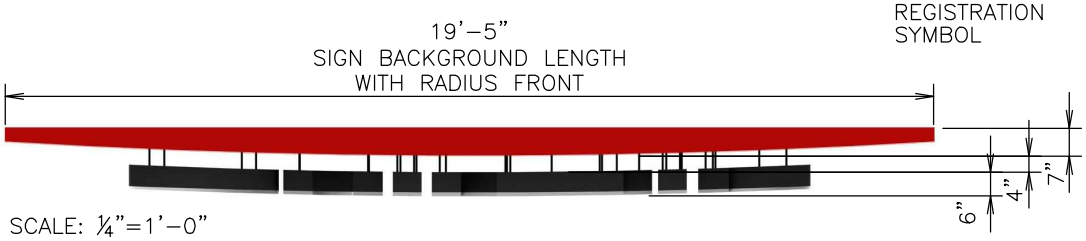

19'–5¼" WALL OPENING
19'–5"
SIGN BACKGROUND LENGTH
WITH RADIUS FRONT
QuikTrip
6'–3" SIGN HEIGHT
6'–7" WALL OPENING

SCALE: 3/32"=1'–0"

19'–5"
14'–2"
QuikTrip
1'–2"
3'–2"
6'–3¼"
9¼"
1'–2"
1½" DIAMETER
BLACK VINYL
REGISTRATION
SYMBOL

SCALE: ¼"=1'–0"

19'–5"
SIGN BACKGROUND LENGTH
WITH RADIUS FRONT
6"
4"
7"

SCALE: ¼"=1'–0"

SPECIFICATIONS:

Letters

6" deep Channel Letters, 3/16" formed Cyro Translucent White face, Aluminum Construction. Letter Returns painted Benjamin Moore 2134-30 Iron Mountain. Internally illuminated with GE Tetra MiniMax 65K White/GE PS12-60 Power Supplies. Halo backlit illuminated with Red GE Tetra MiniMax/GE PS12-60 Power Supplies. Letters are projected 4" off back panel with Lag Bolts.

Red Back Panel

.125 thick Aluminum, painted to match 3M Cardinal Red Translucent #3632-53 with Akzo Nobel, Satin Finish.

QuikTrip

4705 S. 129□□E. A□□ - Tu□□, OK 74134-7008
P.O. Bo□3475 - Tu□□, OK 74101-3475
p:918.615.7700

□□a□□e□□etters
□a□□S□□□
□□-□0□

NOTES			DRAWN BY	ISSUE DATE
				11.07.12

SQUARE FOOTAGE	
TYPEFACE	59
INSIDE CAN	
ENTIRE SIGN	121

SCALE:
AS NOT ED

SERIAL NUMBER:
C□-60R

STORE NUMBER:

□:□a□t□□□□□rary Prese□tat□o□□E□e□ato□s□S□□a□e Ms□S□□s□□-0□.d□□ - □□00 P□otDate: 12□11□2014 11:15 AM - K□□, Joe

SCALE: 3/32"=1'-0"

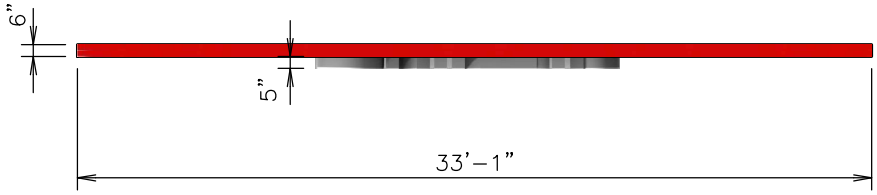

SCALE: 1/4"=1'-0"

SCALE: 1/4"=1'-0"

Rear Wall Sign
CL-44HV

NOTES			DRAWN BY	ISSUE DATE
			JK	05.04.17

SQUARE FOOTAGE	TYPEFACE	INSIDE CAN	ENTIRE SIGN
			150

SPECIFICATIONS:

Letters
5" Deep Channel Letters with White LED Internal Illumination.
Red Back Panel
6" Deep Panels

COLOR REFERENCE:
NOTE: AKZO NOBLE PAINT SPECIFIED FOR ALL PAINTED SURFACES

- EMBOSSED FACE PANELS: TRANSLUCENT WHITE LD POLYCARBONATE NON-GLARE FINISH
- QT RED, AKZO NOBLE PAINT MATCH 3M CARDINAL RED TRANSLUCENT VINYL #3632-53, SATIN FINISH
- LETTER RETURNS TO BE AKZO NOBLE PAINT MATCH TO BENJAMIN MOORE #2134-30 IRON MOUNTAIN

SCALE:
AS NOTED
SERIAL NUMBER:
CL-44HV
STORE NUMBER:
431

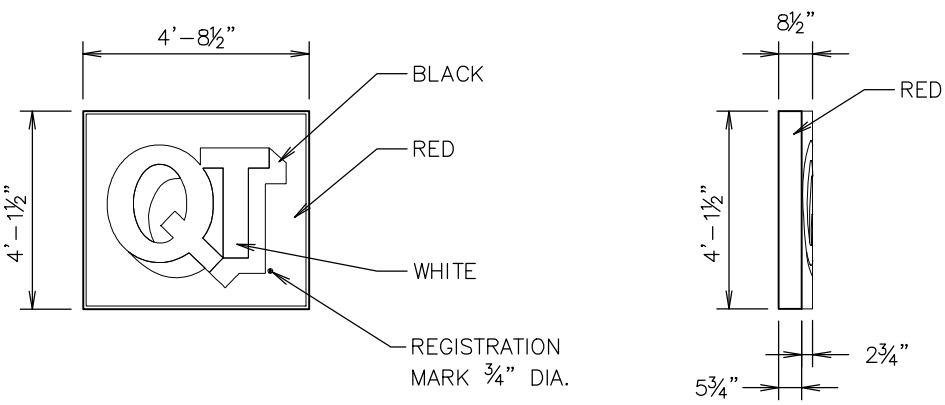

QuikTrip.

4705 S. 129 E. Ave. - Tulsa, OK 74134-7008
P.O. Box 3475 - Tulsa, OK 74101-3475
p:918.615.7700

B d D

DB-20

NOTES		DRAWN BY	ISSUE DATE 11 07 12

SQUARE FOOTAGE	
TYPEFACE	12
INSIDE CAN	
ENTIRE SIGN	20

SCALE:

1 4" 1 0"

SERIAL NUMBER:

DB-20

STORE NUMBER:

SPECIFICATIONS:

LOGO

Flat Solar grade, Clear Cyro Face, .177 thickness, painted on 2nd surface to match 3M Cardinal Red Translucent #3632-53 with Akzo Nobel, no embossment.

LOGO Cabinet

Aluminum Construction, Internally illuminated with GE Tetra PowerStrip DS65/GE PS24 Power Supplies. Painted Akzo Noble, QT Red SIGN9141 Low Gloss.

rary Prese tato E e ato s S a e Ms S s DB-20.d - 00 PotDate: 12 11 2014 11:14 AM - K , Joe

QuikTrip
4705 S. 129TH E. AVE. · TULSA, OK 74134-7008
P.O. BOX 3475 · TULSA, OK 74101-3475
(p) 918.615.7700

Canopy ID

ID-14

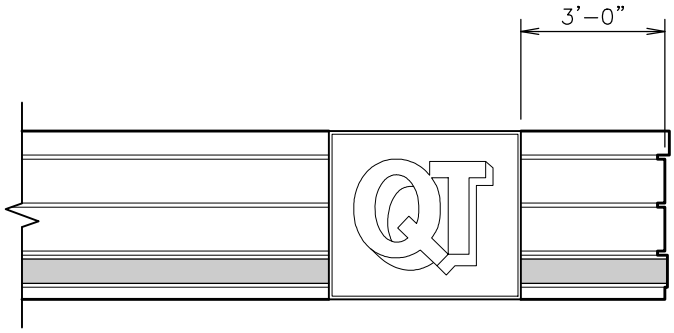

CANOPY ELEVATION

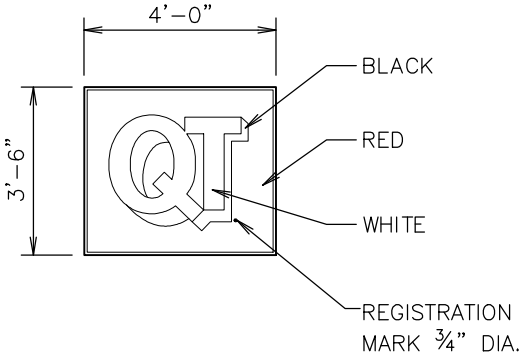

FRONT ELEVATION

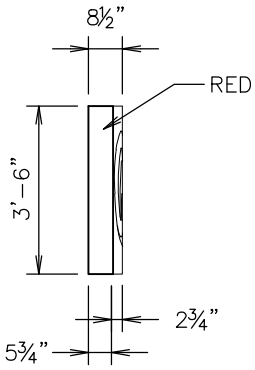

SIDE ELEVATION

NOTES			DRAWN BY	ISSUE DATE
				11.07.12

SQUARE FOOTAGE			
TYPEFACE	7		
INSIDE CAN			14
ENTIRE SIGN			

SPECIFICATIONS:

LOGO

Flat Solar grade, Clear Cyro Face, .177 thickness, painted on 2nd surface to match 3M Cardinal Red Translucent #3632-53 with Akzo Nobel, no embossment.

LOGO Cabinet

Aluminum Construction, Internally illuminated with GE Tetra PowerStrip DS65/GE PS24 Power Supplies. Painted Akzo Noble, QT Red SIGN9141 Low Gloss.

SCALE:

1¼" = 1'-0"

SERIAL NUMBER:

ID-14

STORE NUMBER:

QuikTrip

4705 S. 129TH E. AVE. - Tulsa, OK 74134-7008
P.O. Box 3475 - Tulsa, OK 74101-3475
p:918.615.7700

Mo□□□e□t S□□□
M□10-3P□□

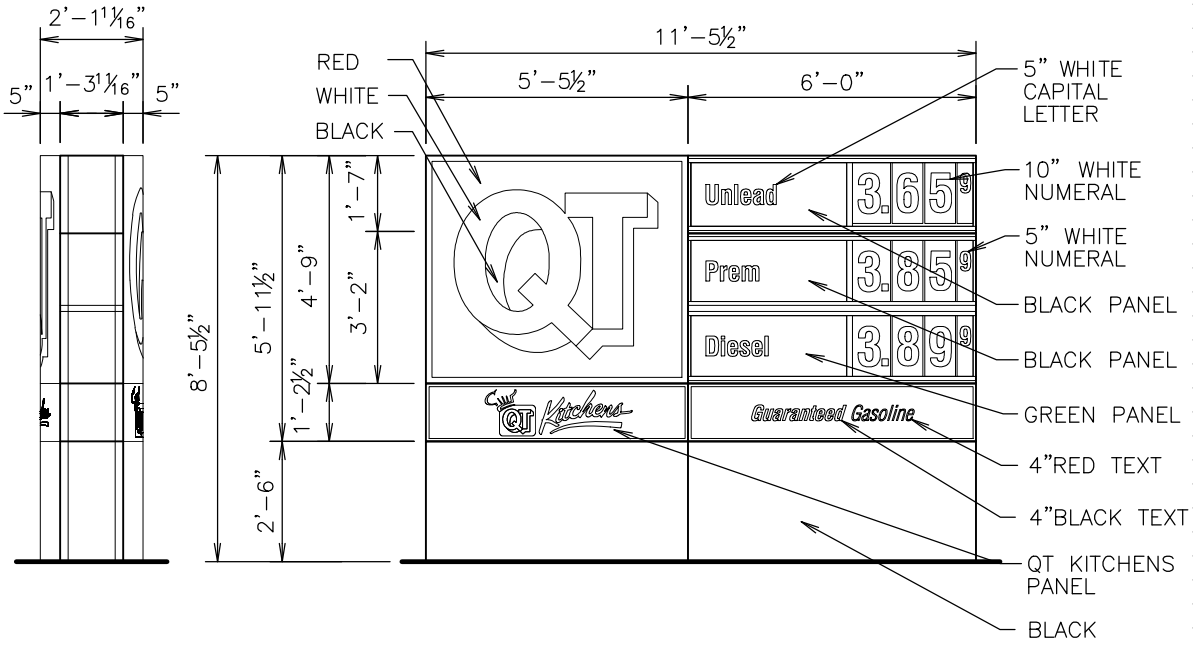

NOTES			
		DRAWN BY	
		ISSUE DATE	12/3/14

SQUARE FOOTAGE		
TYPEFACE		
INSIDE CAN		
ENTIRE SIGN		9

SPECIFICATIONS:

Logo: Flat Solar grade, Clear Cyro Face, .177 thickness, painted on 2nd surface to match 3M Cardinal Red Translucent #3632-53, Akzo Nobel, no embossment.

QT Kitchens Panel: Sign panel

Unlead & Prem Panels: .177" thickness Cyro Acrylic with 1/4" Radius Corners. Panels are painted 2nd Surface with Akzo Noble Opaque Black Background with Translucent White Text

Diesel Panel: .177" thickness Cyro Acrylic with 1/4" Radius Corners. Panels are painted 3M 3632 GPS-26 Green with Matching PMS #349C Green with Translucent White Text

Logo Cabinet/Pricer Cabinet/Base: Aluminum Construction, Internally illuminated with GE Tetra PowerStrip DS65/GE PS24 Power Supplies. LOGO Cabinet painted Akzo Noble, QT Red SIGN9141 Low Gloss. Pricer Cabinet and Base painted Akzo Noble Black Low Gloss. Accent Trim section painted 1st surface Akzo Noble Silver-Low Gloss. Column supports painted Akzo Noble Black Low Gloss.

Guaranteed Gasoline Panel: Sign panel

SCALE:
1 4" □ 1 -0"

SERIAL NUMBER:
M□10-3P□□

STORE NUMBER:

□:□a□t□□□□rary Prese□tat□□E□e□at□□s S□□a□e□Sta□dard Mo□□□e□t S□□s M□10-3P□□.d□□ - □□□00 PlotDate: 12/10/2014 3:51 PM - K□, Joe

Front Elevation

Right Elevation

Rear Elevation

Left Elevation

QuikTrip.

4705 South 129th East Ave.
Tulsa, OK 74134-7008
P.O. Box 3475
Tulsa, OK 74101-3475
(918) 615-7700

Store # 431 Angle Entry w/ CL-44HV Rear Signage	Address: NEC Mesa Dr & Baseline Rd	City, State: Mesa, AZ		
Serial # 05-0431-BSTI	Scale: 1/16"=1'-0"	Issue Date: 05.04.17	Drawn By: JK	Rev/Notes: A — Per Mesa City Code Title 6, Chapter 22, Section 10(D)(3)(a), we are providing an unobstructed line of sight from the sales transaction area that spans from 4 feet above the ground to 7 feet above the ground.

	FINISH	MANUFACTURER	SPECIFICATION
1	BRONZESTONE	INTERSTATE BRICK	ATLAS STRUCTURAL BRICK
2	MIDNIGHT	INTERSTATE BRICK	ATLAS STRUCTURAL BRICK
3	HLZ-ALUMINUM	ALPOLIC	FASCIA
4	QT RED	LANE	STANDING SEAM AWNING
5	RED POLYCARBONATE	ALLEN INDUSTRIES	ILLUMINATED BAND
6	DARK BRONZE	LANE	METAL/PAINT
7	QT BROWN	SHERWIN WILLIAMS	PAINT
8	CL-60R	ALLEN INDUSTRIES	SIGNAGE
9	EVENING VEIL	DALTILE	INVOKE
10	BLACK	ALL COURT FABRICS	POLYPRO 95 MESH
11	IDB-20	ALLEN INDUSTRIES	ILLUMINATED SIGNAGE
12	CL-44HV	ALLEN INDUSTRIES	ILLUMINATED SIGNAGE

COPYRIGHT © 2011 QUIKTRIP CORPORATION DESIGN PATENTS
QUIKTRIP PLANS ARE THE EXCLUSIVE PROPERTY OF QUIKTRIP CORPORATION, TULSA, OKLAHOMA. THESE PLANS ARE PROTECTED IN THEIR ENTIRETY BY DOMESTIC AND INTERNATIONAL COPYRIGHT AND PATENT STATUTES. ANY UNAUTHORIZED USE, REPRODUCTION, PUBLICATION, DISTRIBUTION OR SALE IN WHOLE OR IN PART, IS STRICTLY FORBIDDEN.

QuikTrip

Store 431

05-0431-PE09

Mesa, AZ

Date: 05.02.17 By:JK

QuikTrip

Store 431

05-0431-PE08

Mesa, AZ

Date: 05.02.17 By:JK

Fixture Type "G-D"

AccuLite™

ALARI™ LED
Wall Sconce

LED, 50W OR 77W - UP TO 5,200 LUMENS

Project:

Fixture Type:

Location:

Contact/Phone:

Cat. No:

PRODUCT DESCRIPTION

The Alari LED Wall Sconce is a wall mounted performance luminaire that provides a graceful transition from the parking lot to the building. The sweeping curves and elegant lines create a daytime appeal not normally found in a luminaire of this type. The high performance optics complete the Alari package, providing even illumination and exceptional fixture spacing. The Alari LED Wall Sconce is available with a robust LED engine that delivers up to 5,000 lumens and it can be ordered with an optional integral emergency battery system.

PRODUCT SPECIFICATIONS

Optics Custom designed, high performance molded TIR (Total Internal Reflection) optics shape the LED light with a wide throw or a forward throw distribution • The wide and forward throw distributions are performance oriented to extract the maximum light out of the LEDs and deliver it exactly where needed • A stainless steel polished to mirror finish reflector projects light out of the fixture, maximizing fixture performance • A tempered glass lens completely seals the optical system.

"Dark Sky" Friendly Meets Dark Sky ordinance requirements.

Tool-Less Access Snap action door latch reduces installation time. No tools are required for access to the driver or wiring compartment.

Construction Die cast aluminum housing • Stainless steel external hardware • Hinged door • Tempered glass lens mechanically attached with lens clips to facilitate lens replacement • Silicone rubber gaskets completely seal the unit • Rubber grommet for wiring entry keeps insects and dust out of the fixture • J-Box mounting bracket includes level for a straight fixture installation • Stainless steel polished to mirror finish reflector.

Thermal Management LED boards are mounted to an aluminum heat sink that is directly attached to the external housing, transferring the LED heat to the outside of the fixture through the housing surface.

"Easy-Install" Mounting Mounts to a standard 3 1/2" or 4" junction box • Using the built-in level, align the bracket and secure it • Hang the luminaire and secure with heavy duty set screws

Finish Polyester powder coat finish with a six stage application process • Bronze, black, white or silver are standard • Designer finishes available upon request (provide RAL number).

Emergency Lighting Option An optional integral battery pack can be provided for emergency lighting during a power outage • Emergency battery pack is internal to the fixture so there is no need for any external battery installation • Choose between EM option (0° to 40°C, 32° to 104°F ambient) and EX option (-20° to 40°C, -4° to 104°F ambient).

0-10V Dimming Option An optional 0-10V dimming driver (D option) is fully compatible with Schneider Electric C-Bus networks

Certification Fixture meets UL1598 and CSA C22.2-250 standards • Suitable for wet location applications • Full fixture IP65 rating • Compliant with Dark Sky ordinances • Union made • Driver meets UL879, UL1310 Class 2, cUL, FCC CE (EN55 015, EN61347) • Driver is RoHS compliant • Assembled in the USA • Meets "Buy American Act" and ARRA • 5 year limited warranty.

Specifications subject to change without notice.

DIMENSIONS

D	W	H
13 1/2"	15 1/2"	8"

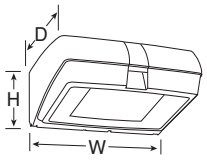

LED LUMEN DEPRECIATION

Ambient Temperature (˚C)	Fixture	L_{70} Hours
25℃	AW2 Series	60,000

Juno Lighting Group by Schneider Electric

PRODUCT CODES

Series	Lamp (Watts/Type @ 5100K)	Color Temperature	Volts	Distribution	Options
AW2					
AW2	**- A033** LED, 3300 Lumens, 50 watts **- A050** LED, 5000 Lumens, 77 watts	**- 5K** 5100K **- 4K** 4100K	**- UN** 120-277V **- E12** 120V **- E20** 208V **- E24** 240V **- E27** 277V **- E34** 347V	**- WT** Wide Throw **- FT** Forward Throw	**- PC*** Photo Control **- EM** * Emergency Ballast **- EX*** Emergency Ballast, Cold Temps **- F1*** Fuse Single Pole Line to Neutral **- F2*** Fuse for 208V, 240V **- D** 0-10V Dimming Driver **Color** **- no suffix** Bronze Finish **- BL** Black Finish **- SL** Silver Finish **- WH** White Finish ***Specify Voltage

ACCESSORIES

Accessories are ordered and shipped separately

Description	Catalog #
Polycarbonate Guard	**AW-PG**
Wire Guard	**AW-WG**
Side Shield	**AW-SS**

LED PERFORMANCE

	Distribution	CCT	CRI	Delivered Lumens	Input Voltage	Watts	System Efficacy
AW2 Series, 50W							
AW2-A033-4K-UN-FT	Forward	4000K	75	2207	120	50	44
AW2-A033-4K-UN-WT	Wide	4000K	75	2195	120	50	44
AW2-A033-5K-UN-FT	Forward	5000K	70	3497	120	50	69
AW2-A033-5K-UN-WT	Wide	5000K	70	3478	120	50	69
AW2 Series, 77W							
AW2-A050-4K-UN-FT	Forward	4000K	75	3299	120	77	43
AW2-A050-4K-UN-WT	Wide	4000K	75	3281	120	77	43
AW2-A050-5K-UN-FT	Forward	5000K	70	5226	120	77	70
AW2-A050-5K-UN-WT	Wide	5000K	70	5197	120	77	69

JUNO LIGHTING GROUP by Schneider Electric

1300 S. Wolf Road • Des Plaines, IL 60018 • Phone (847) 827-9880 • Fax (847) 827-2925
220 Chrysler Drive • Brampton, Ontario • Canada L6S 6B6 • Phone (905) 792-7335 • Fax (905) 792-0064
Visit us at www.junolightinggroup.com
Printed in U.S.A. ©2012 Juno Lighting, LLC.

Fixture Type "M"

AccuLite™

SIGN LIGHTER

12V MR16 Straight Arm

INDOOR/OUTDOOR

S313M

Project:

Fixture Type:

Location:

Contact/Phone:

PRODUCT DESCRIPTION

Versatile low voltage sign lighter that is adjustable to fit most sign lighting applications. Each complete Sign Lighter Kit includes: 18" fixture, 12" extension, 6" extension, transformer, mounting hardware and instructions.

Sealed assembly for indoor or outdoor use • Easy to assemble, modular extensions • Dimmable • Max 75W, MR16 lamp (not included) • Will accept one lens accessory • 75W electronic transformer with thermal and short circuit protection • Available in black or bronze powder painted finishes.

Canopy Diameter: 6-1/2"

PRODUCT SPECIFICATIONS

LOW VOLTAGE MR16 SIGNLIGHTER

Electrical

Lamp: 12V, MR16 Lamp (not included)

Lamp Holder: 2-Pin GU5.3 Base, 12V Halogen lamp socket

Transformer: 75W, 120V 60Hz

Mechanical

All Aluminum Construction

Tubular Construction: 1" Diameter inter-connected tubes, Kit includes lengths of 18"/24"/30"/36"

Lamp Housing and Tube Support: Available in Black or Bronze powder coated finish

Adjustability: 180° vertical aiming and 360° horizontal rotation

Weather Resistant: "O"-Ring weather resistant seals

Mounting: Wall mounting on surface or over J-box

Agency Approval

ETL Listed for wet applications

DIMENSIONS

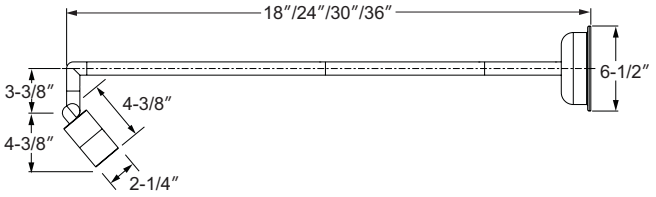

LOW VOLTAGE MR16—ORDERING INFORMATION			
Catalog Number	**Description**	**Finish**	**Lamp**
S313M-BZP	12V MR16 Straight Arm	Bronze	Max 75W, MR16
S313M-BLK	12V MR16 Straight Arm	Black	Max 75W, MR16

1300 S. Wolf Road • P.O. Box 5065 • Des Plaines, IL 60017-5065
Phone (847) 827-9880 • Fax (847) 827-2925 • Visit us at www.junolightinggroup.com

Printed in U.S.A. ©2011 Juno Lighting, LLC.

Juno Lighting Group by Schneider Electric

Fixture Type "LEDO"

JUNO

5" IC LED DOWNLIGHT NEW CONSTRUCTION

IC20LEDG2 RECESSED HOUSING

WALL WASH TRIM

Project:

Fixture Type:

Location:

Contact/Phone:

PRODUCT DESCRIPTION

Dedicated LED, Air-Loc® sealed new construction housing with integral light engine • Can be completely covered with insulation • Fully sealed housing stops infiltration and exfiltration of air, reducing heating and air cooling costs without the use of additional gaskets • LED housing is designed to provide 50,000 hours of life and is compatible with many standard Juno trims • 5 year warranty.

ENVIRONMENTALLY FRIENDLY, ENERGY EFFICIENT

- No harmful ultraviolet or infrared wavelengths
- No lead or mercury
- Comparable light output to 65W BR30 incandescent while consuming less than 14W*

EcoLEDgy Driven

PRODUCT SPECIFICATIONS

LED Light Engine Cast aluminum heat sink integrated directly with housing provides superior thermal management to ensure the long life of the LED • Replaceable light engine mounts directly to heat sink and incorporates the latest generation, high lumen output LED array • LEDs are binned to standards that exceed Energy Star requirements yielding superior fixture to fixture color uniformity • 2700K, 3000K, 3500K, or 4100K color temperatures available • 85 CRI typical.

Optical System Computer-optimized internal reflector with high reflective white finish coupled with a high transmission diffusing lens conceals the LEDs and produces uniform aperture luminance.

Aesthetic Trim Selections Low profile scoop wall wash trim • Shadow free, knife edge design blends seamlessly into ceiling.

LED Driver Universal voltage driver accommodates input voltages from 120 to 277 volts AC at 50/60Hz • Power factor > 0.9 at 120V input • Driver has integral protection • Driver is dimmable with the use of most 120V electronic low voltage wall box dimmers • Optional 120 volt only driver available and is dimmable with the use of most incandescent, magnetic low voltage and electronic low voltage dimmers • For a list of compatible dimmers see JUNOLEDG2-DIM • Mounted between the j-box and housing for easy access and cool operation.

Life Rated for 50,000 hours at 70% lumen maintenance.

Labels UL listed for through-branch wiring, damp locations • Union made, UL and cUL.

Testing All reports are based on published industry procedures; field performance may differ from laboratory performance.

Product specifications subject to change without notice.

HOUSING FEATURES

Housing Designed for use in IC (insulated ceiling) or non-IC construction • Aluminum housing sealed for Air-Loc® compliance • Housing is vertically adjustable to accommodate up to a 1" ceiling thickness.

Junction Box Pre-wired junction box provided with (5) ½" knockouts, (4) knockouts for 12/2 or 14/2 NM cable and ground wire • UL listed and cUL listed for through-branch wiring, maximum 8 #12 @120V, 4 #12 @ 277V branch circuit conductors • Junction box provided with removable access plates • Knockouts equipped with pryout slots • Push-in electrical connectors supplied as standard for fast, secure installation.

Mounting Frame 22-gauge die-formed galvanized steel mounting frame • Rough-in section (junction box, mounting frame, housing and bar hangers) fully assembled for ease of installation.

Real Nail 3 Bar Hangers Telescoping Real Nail 3® system permits quick placement of housing anywhere within 24" O.C. joists or suspended ceilings • Includes removable nail for repositioning of fixture in wood joist construction • Integral T-bar notch and clip for suspended ceilings • Design covered under Patents US5,505,419 and D552,969.

* Nominal input wattage @ 120-volt operation.

DIMENSIONS

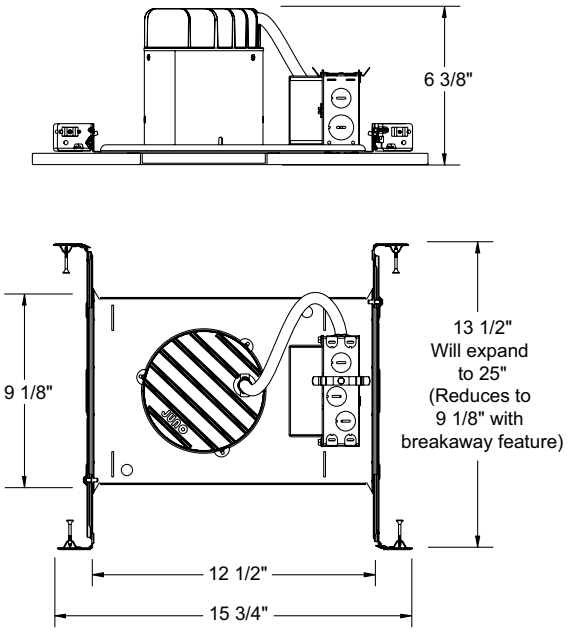

5 5/8" CEILING CUTOUT

ELECTRICAL DATA

Standard Universal Voltage

	120V	277V
Input Power	14.5W (+/-3.5%)	15.5W (+/-3.5%)
Input Current - Max	0.125A	0.058A
Frequency	50/60Hz	50/60Hz
EMI/RFI	FCC Title 47 CFR, Part 18, Class B (consumer)	FCC Title 47 CFR, Part 18, Class B (consumer)
Minimum starting temp	-30°C	-30°C

ELECTRICAL DATA

Dedicated 120V Only Driver Option

	120V
Input Power	14.5W (+/-3.5%)
Input Current - Max	0.125A
Frequency	50/60Hz
EMI/RFI	FCC Title 47 CFR, Part 18, Class B (consumer)
Minimum starting temp	-20°C

Juno Lighting Group by Schneider Electric

Fixture Type "SOFF"

LED SOFFIT LIGHT (XSL2)

DOE LIGHTING FACTS

Department of Energy has verified representative product test data and results in accordance with its Lighting Facts Program. Visit www.lightingfacts.com for specific catalog strings.

US patents D574994 & D595896 & 7828456 and US & Int'l. patents pending

EXPECTED LIFE - Minimum 60,000 hours to 100,000 hours depending upon the ambient temperature of the installation location. See LSI web site for specific guidance.

LEDS - Select high-brightness LEDs. Cool White 5000K color temperature, 69 CRI.

DRIVER CURRENT - Super saver (SS) - most economical and highest lumens per watt or High Output (HO) - highest output per initial dollar.

DISTRIBUTION/PERFORMANCE - Type S (Symmetric) or 5A (Type 5). Excellent uniformity with Bug rating of BU-UO-G1. Optional diffused lens available to reduce visibility of diodes

HOUSING/OPTICAL UNIT - Housing is die-formed aluminum with a gasketed clear tempered glass lens providing a water-resistant seal. Weather-tight aluminum enclosure contains factory prewired driver to ensure no water entry. Sealed optical unit containing LEDs rated IP67.

MOUNTING - Direct mounts with screws through the trim frame (standard). Optional channel bar kit available to suspend assembly from ceiling joists. 12" clearance required for ease of installation.

ELECTRICAL - Universal frequency power supply (50/60 Hz). Supply voltage must be specified for pre-wired thermal protectors.

DRIVER - State-of-the-art driver technology designed specifically for LSI LED light sources provides unsurpassed system efficiency. Driver will operate with input of 120/208/240/277V (50/60 Hz). Components are fully encased in potting material for moisture resistance. Driver complies with IEC and FCC standards.

OPERATING TEMPERATURE - -40°C to +50°C (-40°F to +122°F).

FINISH - Each fixture is finished with LSI's DuraGrip® polyester powder coat finishing process. The DuraGrip finish withstands extreme weather changes without cracking or peeling, and is guaranteed for five full years. Standard color is white.

WARRANTY - LSI LED fixtures carry a limited 5-year warranty.

PHOTOMETRICS - Please visit our web site at www.lsi-industries.com for detailed photometric data.

LISTING - Listed to U.S. and Canadian safety standards. Suitable for damp locations. For a list of the specific products in this series that are DLC listed, please consult the LED Lighting section of our website or the Design Lights website at www.designlights.org.

LIGHT OUTPUT - XSL2

	Clear Lens	Lumens	Watts	LPW
Type S	SS - Super Saver	6,193	60	103
	HO - High Output	8,348	86	97
Type 5A	SS - Super Saver	5,158	60	86
	HO - High Output	6,959	86	81
	Diffused Lens			
Type S	SS - Super Saver	5,752	60	96
	HO - High Output	6,751	87	78
Type 5A	SS - Super Saver	4,393	60	73
	HO - High Output	5,842	87	67

LED Chips are frequently updated therefore values may increase.

This product, or selected versions of this product, meet the standards listed below. Please consult factory for your specific requirements.

ARRA Funding Compliant · DLC · ETL Intertek damp location · RoHS COMPLIANT · FC · IDA · CE · IP67

Project Name _____ Fixture Type _____

Catalog # _____

10/21/15

© 2015 LSI INDUSTRIES INC.

LED SOFFIT LIGHT (XSL2)

PRODUCT ORDERING INFORMATION

TYPICAL ORDER EXAMPLE: **XSL2 S LED 50 SS CW 120 WHT CMT**

Prefix	Distribution	Light Source	# of LEDs	Drive Current	Color Temperature	Input Voltage	Finish	Options
XSL2 - Soffit Light	S - Symmetric 5A - Type 5	LED	50	HO - High Output SS - Super Saver	CW - Cool White (5000º K nom.)	120 208 240 277 347	WHT - White	CMT - Channel Bar Mounting Kit DM - Direct Mount DFL - Diffused Lens

DIMENSIONS

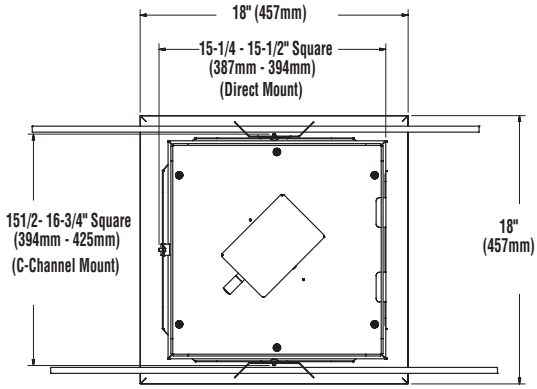

TOP VIEW

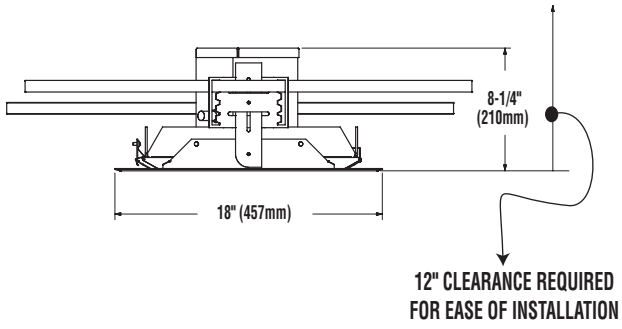

SIDE VIEW
(Channel Mount Shown)

SHIPPING WEIGHT - 14 lbs. (6.4kg)

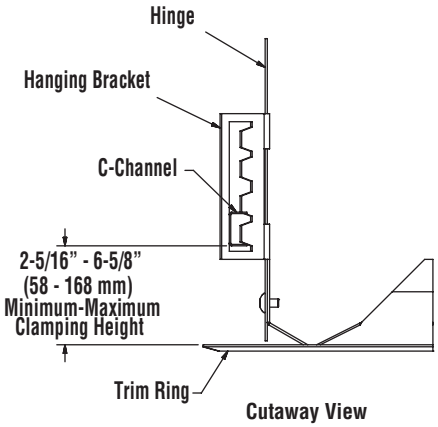

Cutaway View

© 2015
LSI INDUSTRIES INC.

Fixture Type "LDEM"

Moonlite LED™ For Lighting Retrofit Emergency with Night Lighting Option

Recessed LED Down Light Series MRD

MRD.01.15.06

The Brightest Idea is Emergency Lighting with LEDs

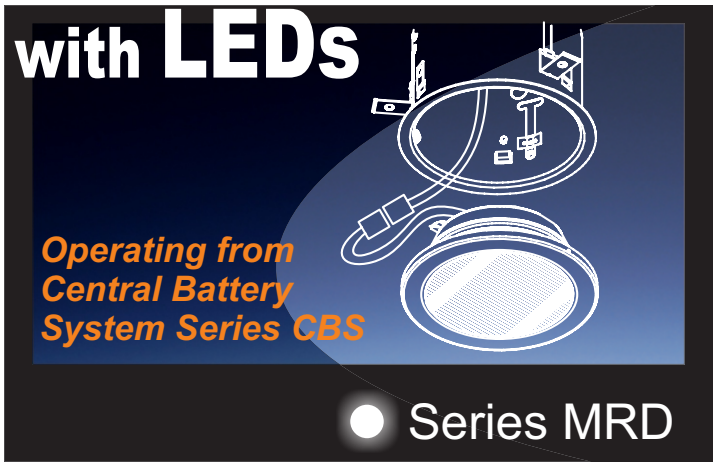

GENERAL DESCRIPTION

With spacing up to 55 ft in 9 ft ceilings, this recessed down light for lighting retrofit has only a 4” trim, and is our most efficient emergency luminaire. Very effective in long corridors, it is inconspicuous and will blend with general lighting fixtures without affecting the appearance of ceiling layouts.

CONSTRUCTION

- 4" Trim ring installation with standard can and Back plate.
- Three versions available:

  BB=Unit equipment with self-contained battery
  RE=Remote for connection to 24 VDC Central Battery System
  AC=Remote for connection to AC 120/277 emergency supply.

ELECTRONICS

- Lamps are connected in parallel. If one lamp fails, one or more lamps will continue in operation.
- Universal 120/277 VAC input for standard battery or AC unit, or 24 VDC input for remote configuration.
- Power supply delivers regulated current and voltage to LED lamps at optimum levels to maximize lamp life.
- Automatic battery diagnostics available for all battery models.

ENERGY EFFICIENT OPERATION

- Emergency lighting with optional dual function operation for night or security lighting.
- Very low power consumption in optional night/ security mode. The security lighting circuit is independent of emergency lighting and may be switched manually, by an exterior photocell, or other automatic means.
- Over 50,000 hour lamp life in normal use.
- IES photometric data available for all models.

CODES

- Manufactured and tested to UL Standard 924 and NFPA Life Safety Code 101.

WARRANTY

- 5 year total customer satisfaction warranty. For details see product catalog technical data section.

DESIGNED & MANUFACTURED IN THE USA

C ETL US LISTED Intertek CONFORMS TO UL 924/ CSA 22.2 #141

FIXTURE SCHEDULE

MODEL	CATALOG NO
APPROVAL	JOB INFORMATION

Signtex Inc LIGHTING SPECIFIED EMERGENCY LIGHTING

Moonlite LED™ Emergency & Security Light For Lighting Retrofit

Recessed LED Down Light Series MRD

MRD.01.15.06

SUGGESTED SPECIFICATIONS:

Install MOONLITE™ Series MRD Recessed LED downlight emergency lighting fixture manufactured by Signtex Inc., available as unit equipment or as a remote device connected to a Central Battery power source. Upon loss of AC building power, emergency models shall operate for a minimum of 90 minutes in compliance with UL 924 and NFPA LSC Code 101. The unit may be specified to operate continuously for security or night lighting, as required.

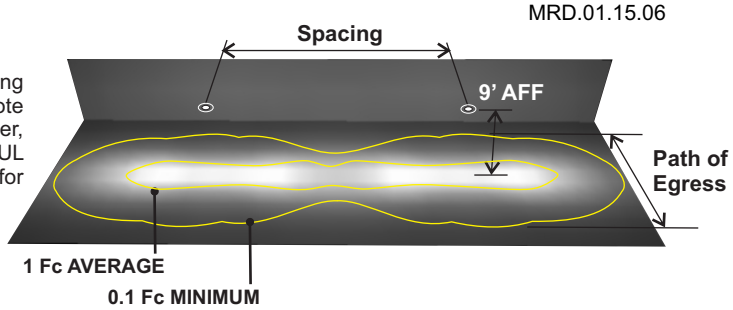

MOUNTING DATA & DIMENSIONS:

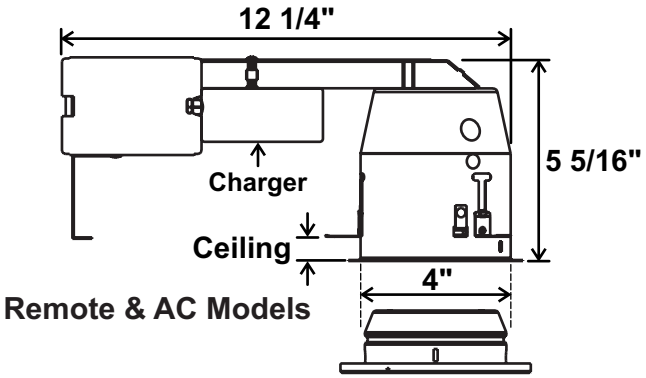

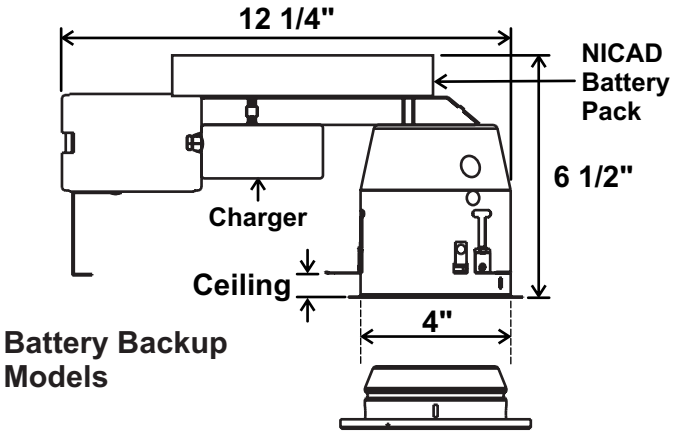

SPACING GUIDE

Average Illuminance 1 Fc

Model	Mtg. Ht.	SPACING		
		Path of Egress Width		
		3 Ft.	6 Ft.	10 Ft.
7 W	9'	50'	40'	25'
10 W	9'	55'	50'	40'

NOTE: TESTED IN ACCORDANCE WITH IES STANDARD LM-79-08 FOR SOLID STATE LIGHTING PRODUCTS. FOR REFERENCE ONLY. STANDARD REFLECTANCES 80/50/20. SIGNTEX IS NOT RESPONSIBLE FOR SPECIFIC CONDITIONS THAT MAY ALTER THE RESULTS. COMPLETE IES PHOTOMETRIC DATA AVAILABLE AT WWW.SIGNTEXINC.COM FOR YOUR CONVENIENCE.

CONTACT SIGNTEX FOR LAYOUT ASSISTANCE

Code Compliant Emergency lighting layouts provided free of charge!

POWER RATING

MODEL	OPERATION	WATTS	
BB	Emergency	7	10
	SEC/ Normal On	4	5
RE	Emergency	7	10
	SEC- Standard	4	5
	SEC- HPS	7	10
AC	Line Voltage	4	7

SELF- TEST DIAGNOSTIC FUNCTIONS BB MODELS WITH DG OPTION

STATUS	LED DISPLAY
NORMAL FULL CHARGE	GREEN ON
NORMAL FAST CHARGE	ORANGE ON
FAILED BATTERY	RED FLASH FAST
FAILED LAMP	GREEN FLASH
FAILED TRANSFER	ORANGE FLASH
FAILED CHARGER	RED FLASH SLOW

SECURITY LIGHTING CONTROL

RE Models: Requires SEC Option 'S' with CBS

BB Models: Requires Option 'SW' for connection to 120 VAC

BB-DG Models: Requires Option 'SW' for connection to 120/ 277 VAC

ORDERING INFORMATION: *EXAMPLE:* MRDRE7W-DP

MRD	RE	7	W	-	DP
MODEL SERIES	**OPERATION**	**WATTS**	**TRIM COLOR**		**OPTIONS**
MRD	BB= Battery Backup RE= Remote with Central Battery System AC= AC Supply 120/277V	**BB & RE Models** 7 = 7 Watts 10 = 10 Watts **AC Models** 4 = 4 Watts 7 = 7 Watts	W=White 'X'=Custom		DP= Damp Location DG= Battery Diagnostics (BB Models Only) HPS= High Power SEC Mode (RE Models Only) SW= Security Lighting w/ Control Switch (BB Models Only)

Signtex Inc LIGHTING
220 VFW Avenue, Grasonville, MD 21638
TEL:(410)827-8300 Fax:(410)827-8866
sales@signtexinc.com www.signtexinc.com

DISTRIBUTOR:

Specifications and Dimensions subject to change without notice.

CITIZEN PARTICIPATION REPORT

QuikTrip #431R – NEC Mesa Drive & Baseline Road

Date: July 3, 2017

Purpose: The purpose of this Citizen Participation Report is to inform staff of progress made on the previously submitted Citizen Participation Plan.

Contact:
Charles Huellmantel
Huellmantel & Affiliates
P.O. Box 1833
Tempe, Arizona 85280

Action Plan (Completion Update): In order to provide effective citizen participation in conjunction with this application, the following actions will be taken to provide opportunities to understand and address any potential questions or concerns our neighbors may have:

1. A contact list will be developed for property owners in the area including all property owners within 500' of the site. Because no residential neighborhood are located within a ¼ mile of the subject site, we will not be notifying any registered neighborhood/homeowner associations.
   Update: List provided July 3, 2017.
2. A notification letter will be sent to all property owners within 500' of the subject site consistent with the sample notification letter provided in the Planning & Zoning Board application packet.
   Update: Letter provided to City on July 3, 2017.
3. The site will be posted no later than two weeks prior to the Planning & Zoning Board meeting.
   Update: We have arranged with Dynamite Signs to have the site posted with the proper signage by the end of July 2017.
4. We will discuss the case with any interested party who contacts us regarding our requests, and offer to meet upon request.
   Update: We have not received any contacts at this point, but this item is ongoing.
5. Details of correspondence and telephone calls received will be included in our Citizen Participation Report.
   Update: We have not received any contacts at this point, but this item is ongoing.

Schedule:

- Pre-application Meeting – March 6, 2017
- Application Submittal – May 25, 2017
- Neighborhood Notification Letters Delivered To City – July 3, 2017
- Submittal of Citizen Participation Report & Notification Materials – August 3, 2017
- Planning & Zoning Board Hearing – August 16, 2017

HUELLMANTEL & AFFILIATES

July 3, 2017

Dear Neighbor,

This letter is to inform you that we have applied for approval of a site plan to allow a new QuikTrip store at the northeast corner of Mesa Drive and Baseline Road (APN: 139-49-027A). The proposed location is currently a large vacant lot, and QuikTrip will be occupying a portion of the lot. We are requesting approval of our site plan as well as a Special Use Permit to allow a fueling station as well as an Administrative Use Permit to allow additional parking beyond the Zoning Ordinance requirement. We have enclosed a copy of the site plan, landscape plan and elevations for your review.

Our request will be heard by the Planning & Zoning Board as follows:

Meeting Date:	August 16, 2017
Time:	4:00 p.m.
Location:	Lower Level City Council Chambers – 57 E. 1st Street

If you have any questions or would like to discuss our proposed project, please feel free to give me a call at (480) 921-2800 or contact me via e-mail at charles@huellmantel.com.

For additional information concerning the design of the proposed development or the Design Review process – including to verify the hearing date, please contact the Mesa Planning Division at 55 North Center, or call the Mesa Planning Division Office at 480-644-2385.

Sincerely,

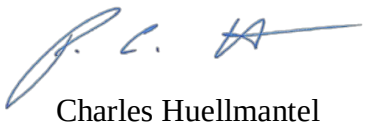

Charles Huellmantel

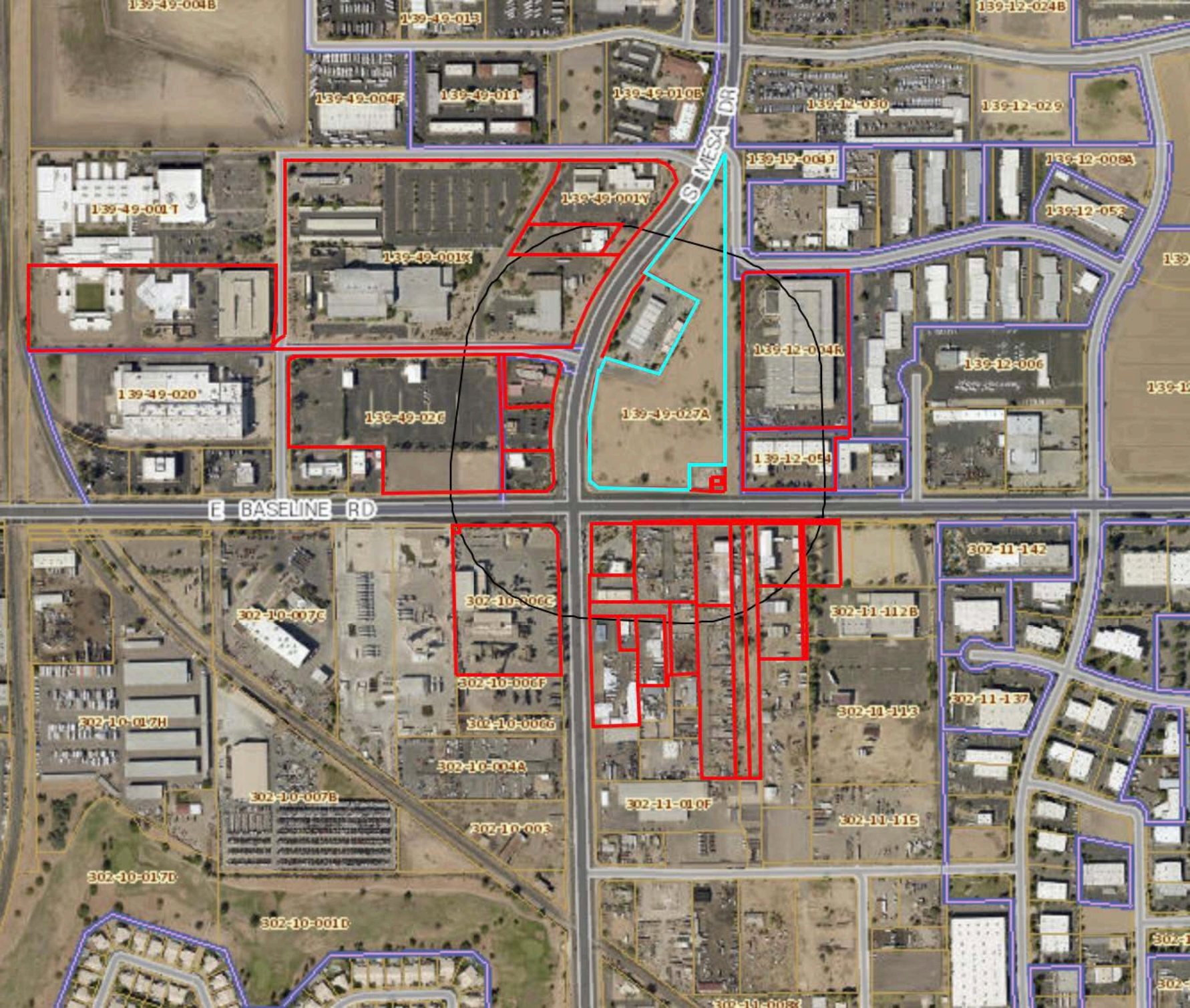
139-49-004B
139-49-013
139-12-024B
139-49-004F
139-49-011
139-49-010B
139-12-030
139-12-029
S MESA DR
139-12-004J
139-12-008A
139-49-001T
139-49-001Y
139-12-053
139-49-001K
139-12-004R
139-12-006
139-49-020
139-49-026
139-49-027A
139-12-054
E BASELINE RD
302-11-142
302-10-007C
302-10-006C
302-11-112B
302-10-006F
302-11-137
302-10-017H
302-10-006G
302-11-113
302-10-004A
302-10-007B
302-11-010F
302-11-115
302-10-003
302-10-017D
302-10-001D

QT #431R - Mesa Drive Baseline Road
Neighborhood Notification List

500-foot notification list

APN	Name	Address	City	State	Zip
139-12-004R	K Matkem Co of AZ LLC	6612 Snowdrift Rd.	Allentown	PA	18106
139-12-054	Auto Baseline LLC	1517 S. Sepulveda Blvd.	Los Angeles	CA	90025
139-49-001M	Arizona State Dept. of Trans.	205 S. 17th Ave.	Phoenix	AZ	85007
139-49-001Q	SRPAI & PD	P.O. Box 52025	Phoenix	AZ	85072-2025
139-49-001S					
139-49-002					
139-49-003					
139-49-001V	Brown & Brown Wholesale LLC	910 S. Country Club Dr.	Mesa	AZ	85210
139-49-001W	Mesa Drive Carwash LP	2398 E. Camelback Rd. Ste. 615	Phoenix	AZ	85016
139-49-001X	Maricopa County of	301 W. Jefferson Ste. 960	Phoenix	AZ	85003
139-49-026					
139-49-001Y	AZ Dept. of Transportation	205 S. 17th Ave.	Phoenix	AZ	85007-3212
139-49-001Z	Native Arizona Acquisitions II LLC	5839 E. Indian School Rd.	Phoenix	AZ	85018
139-49-027A	Sundown Equipment LLC	8185 E. Alameda Rd.	Scottsdale	AZ	85255
139-49-028A	QuikTrip Corporation	P.O. Box 3475	Tulsa	OK	74103-3475
302-10-006C	Superlite Block	4150 W. Turney	Phoenix	AZ	85019
302-10-006D					
302-11-001H	Rent A Lot LLC	5235 E. Southern Ave. D106 PMB 180	Mesa	AZ	85206
302-11-001U					
302-11-001W					
302-11-001X					
302-11-013E					
302-11-001M	2Morco LLP	P.O. Box 5702	Boise	ID	83705
302-11-001V					
302-11-012C					
302-11-003A	Jo E Roberts Tr	5839 E. Indian School Rd.	Phoenix	AZ	85018
302-11-003B	Mark S Gunning	2500 S. Power Rd. Ste. 121	Mesa	AZ	85209
302-11-005A	City of Mesa	20 E. Main St. Ste. 650 P.O. Box 1466	Mesa	AZ	85211

QT #431R - Mesa Drive Baseline Road
Neighborhood Notification List

302-11-005B	Hills McQueen Family LLC	P.O. Box 3439	Gilbert	AZ	85299
302-11-011N					
302-11-118					
302-11-119					
302-11-013F	Signwerks LLC	451 E. Juanita Ste. 3	Mesa	AZ	85204
302-11-013G	Duncor LLC	335 E. Baseline Rd.	Gilbert	AZ	85233
302-11-013H	Lucas B/Linda M Pena	818 E. 6th St.	Mesa	AZ	85201
302-11-013J	Lucas B Pena	818 E. 6th St.	Mesa	AZ	85203
302-11-013K	Padilla Angelina V Etal	1361 N. Pioneer St.	Gilbert	AZ	85233
302-11-013L					
302-11-120	Phoenix Newspapers Inc.	7950 Jones Branch Dr.	Mclean	VA	22102
302-11-121					

With a copy to:

Huellmantel & Affiliates	P.O. Box 1833	Tempe	AZ	85280-1833
Tom Ellsworth City of Mesa, Planning Division	55 N. Center Street P.O. Box 1466	Mesa	AZ	85211-1466